□□□□□□ □□□

5 :□□□□ □□□□mA □□□□ □□□□ 433 :□□□□□ □□□□

12VDC 4 WAY 4NO+4NC CONTROL

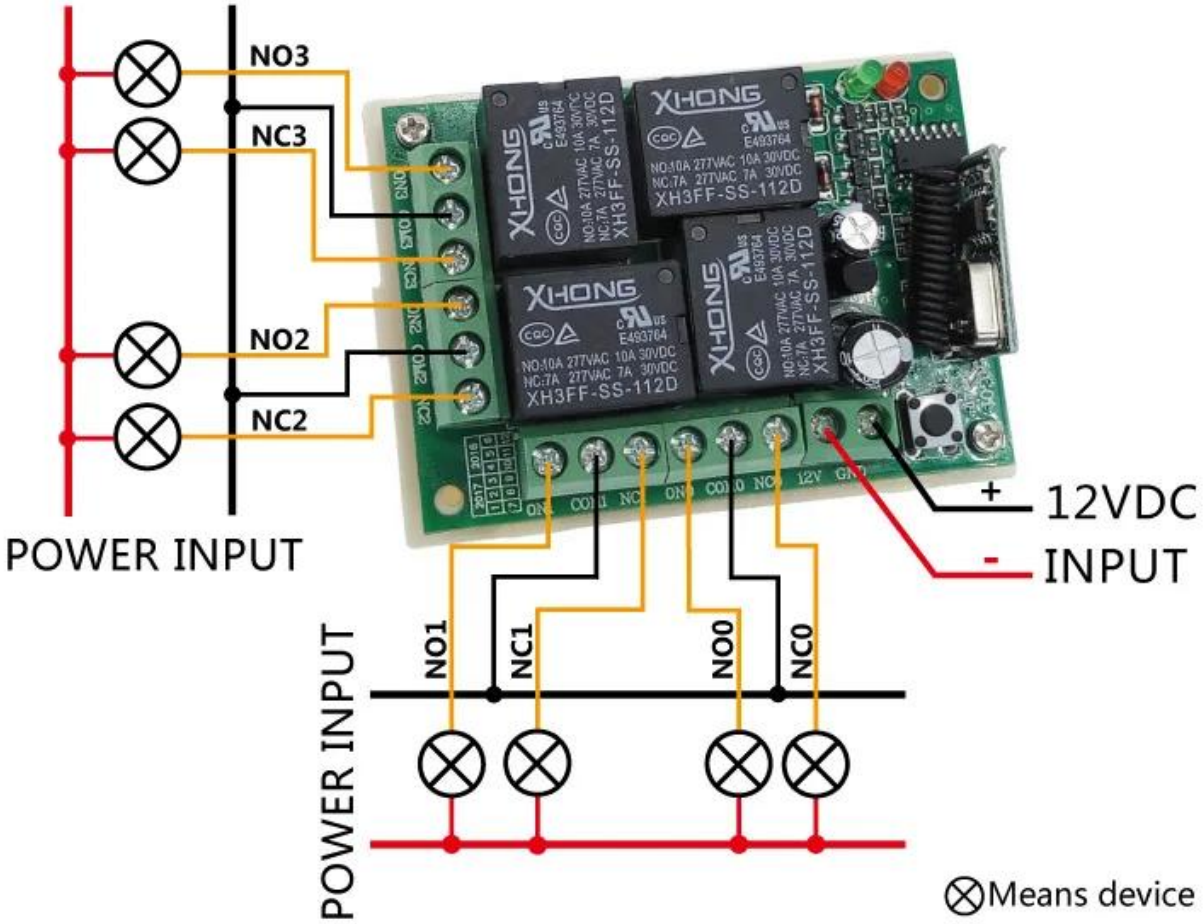

Delete the code before study

Press the KEY for 5 seconds until the green light off,it means the code be cleared.

Learn Momentary Mode

①
After delete the code, press the KEY 1 time, the green LED will bright

②
Then press the "A" ,the green LED flicker, complete!

Learn Self Locking Mode

①

Press the KEY,wait the green LED off,immediately,green LED flicker once and then twice, release the KEY.

②

Press the KEY one time, the green LED will bright,press the "A" ,the green LED flicker, complete!

Learn Interlocked Mode

①

Press the KEY,wait the green LED off,immediately,green LED flicker once and twice then 3 times, release the KEY.

②

Press the KEY one time, the green LED will bright,press the "A" ,the green LED flicker, complete!

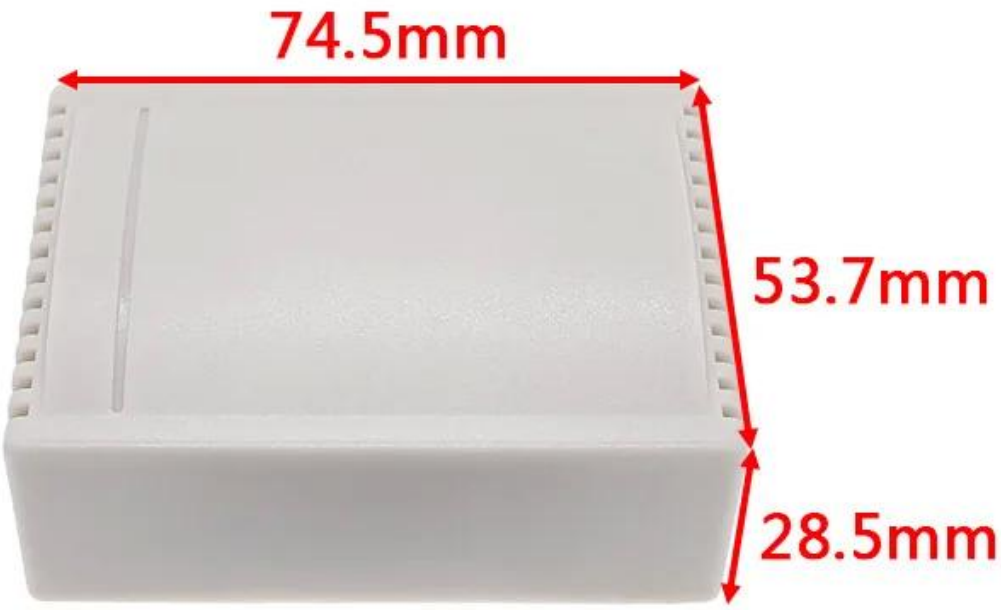
74.5mm
53.7mm
28.5mm

28.5mm
A
B
C
D
61.5mm

□□□□□ □□□□□□

A
B
C
D

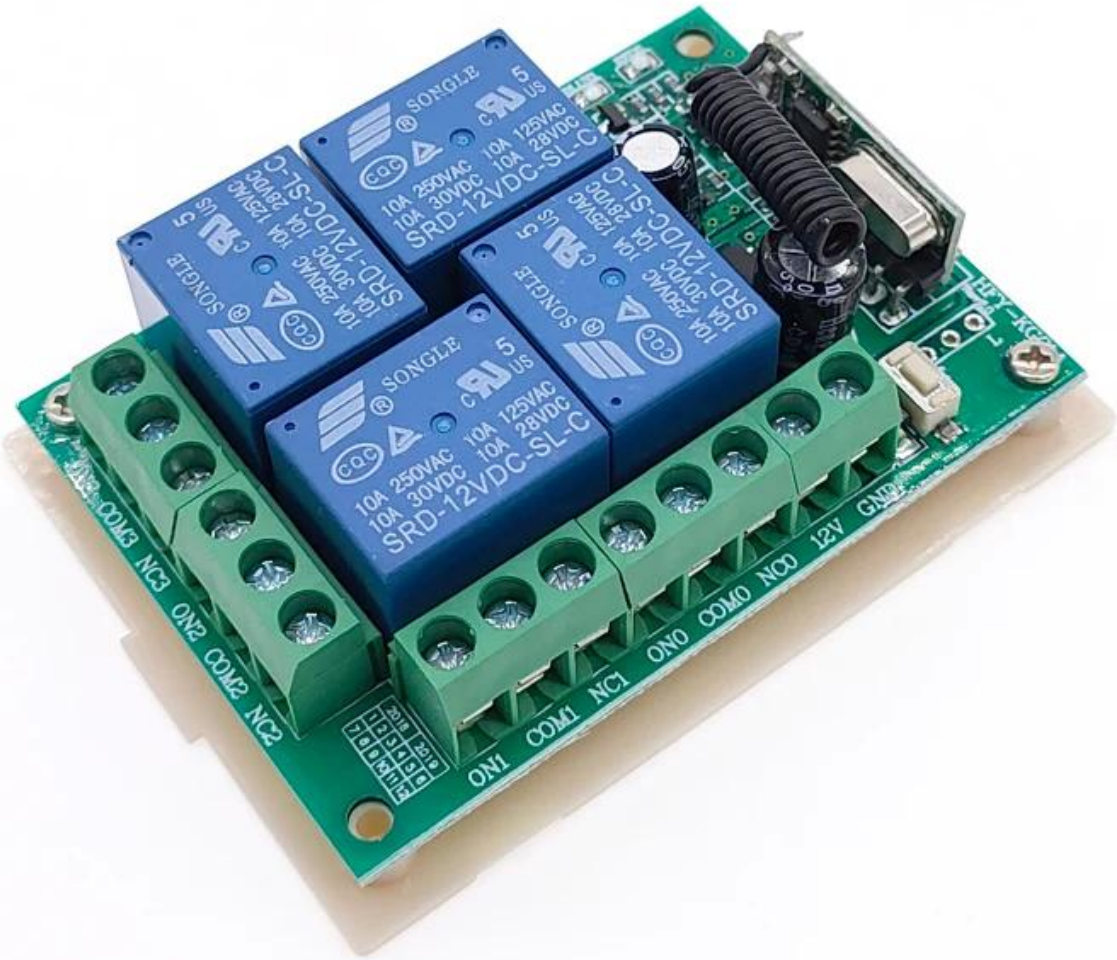
SONGLE
10A 250VAC
10A 30VDC
10A 125VAC
10A 28VDC
SRD-12VDC-SL-C
COM3 NC3 ON2 COM2 NC2
ON1 COM1 NC1 ON0 COM0 NC0 12V GND

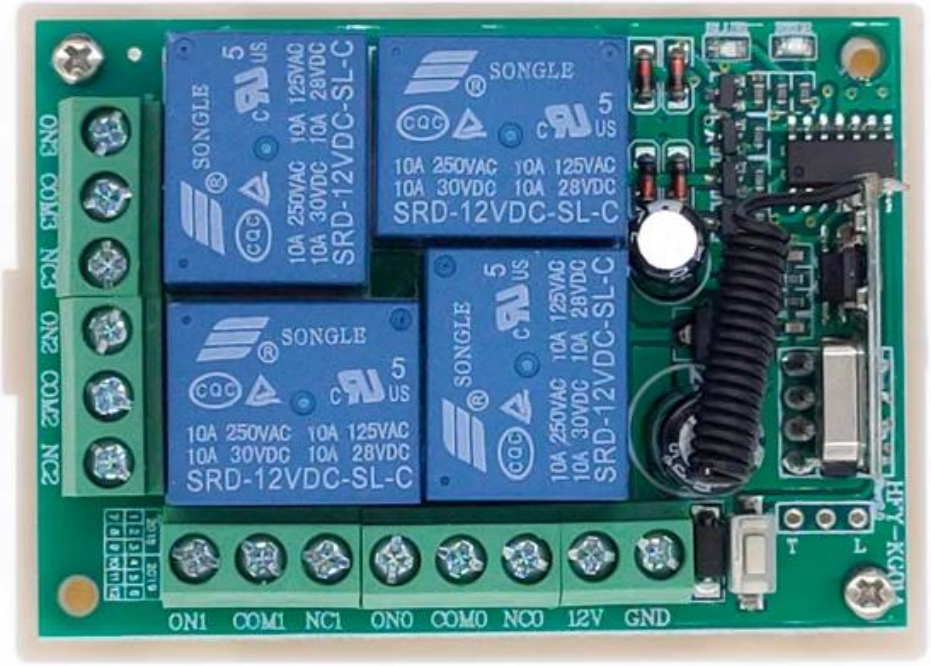
SONGLE
SRD-12VDC-SL-C
10A 250VAC 10A 125VAC
10A 30VDC 10A 28VDC
ON3 COM3 NC3 ON2 COM2 NC2
ON1 COM1 NC1 ON0 COM0 NC0 12V GND
HFY-K001

A
B
C
D
ON3 COM3 NC3 ON2 COM2 NC2

[illegible]

SONGLE
10A 250VAC 10A 125VAC
10A 30VDC 10A 28VDC
SRD-12VDC-SL-C
ON1 COM1 NC1 ON0 COM0 NC0 12V GND

12V

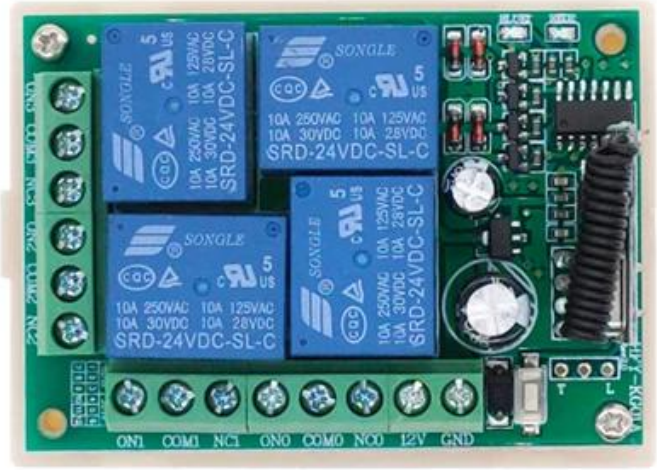
SONGLE
10A 250VAC 10A 125VAC
10A 30VDC 10A 28VDC
SRD-24VDC-SL-C
ON1 COM1 NC1 ON0 COM0 NC0 12V GND

24V

SONGLE
10A 250VAC 10A 125VAC
10A 30VDC 10A 28VDC
SRD-12VDC-SL-C
ON1 COM1 NC1 ON0 COM0 NC0 AC/85V-265V
HFY-KC04C

220V

□□□□□ □□□□□

□□□□□□□ □□□□□□□□□ □□□□□□□□ □□□ □□□ RFID □□□□□ □□ □ □□□□□□ □□□□□□□ □□□□□□□ □□□□□ □□□□ □□ .□□□ 2000 □□□ / □□□ □□ □□□□ □□ □□ □□□□□ □ □□□□□ □□□□□□ □□□□□ □□□□ □□ □□□□□□ □□□□□□ □□□□□ □□□□□□ .□□□□□ □□□□ □□□□ □□□□ □□□ □□ □□□□□ □□□□□ □□□□□□ CO □ FTA □ Form F □ Form E ... □□ □□□□□ □□□□□ □□□□□□ □□□□□□□□ □□□□ □□□ .□□□. EXW □ FOB □ FCT □ CIF □ CFR ... □□□ □□ □□□□□□□ □□□□□ □□ □□□□□□□ □□□□□ □□□□ □□ □□□□□□ .□□□ □□□□□□□ □□ □□□□□□ □□□□□□□□.

□□□□□ □□

.□□□□□□□ □□□□□ □ □□□□□□ □□□ □ □□□□□ □□□ □ □□□□□ .□□□□□□□ □□□□□□ □□ □□□□□ □□□□□ □□□□□ □□□□□□ □□□□ □□□□□ □□□□□□□ □□□□□ □□ □□□□□ □□ □□ .□□□□□□□□ □□ □□□□ □□□ □□□□□□ □□□□□ □□□□□□ □□□ □□□□ □□□□□□□ □□□□□.

□□□□ □□ □□□□ □□ Realese □□□□□
K2B: 86 * 86 □□
□□□□ □□□□□□ □□□□ □□ Realese □□
□□□□□
K9A: 115 * 40 □□□
□□□□□□□ □□□□□□□) □□□□□ □□□□□ □□
□□□□□ □ NO / NC) K5B: 86 * 86 □□

PRESS
TO EXIT

PUSH TO
EXIT

□ □□□□□□ □□□□□□□□□) □ □□□□□ □□□□□ □□

□□) □ K4B: 86 * 86 □□
□□□□□ □□□□□□□ □□□□□□□ Hihg □□□□
Kirsite. K14B: 86 * 86 □□□
□□□□□□□ □□□□□□□ □□ □□□ □□□ □□
□ □□□□□ K815B: 86 * 86 □□□

□□□□□□

1 □ □□□□ 24 □□□□ □□ □□□□□□□□□□ □□ □□□ □□□□ □□□□
2 □ □□□□□□□ □□□□□□□□ □□□□ □□□ □□□□□□ □□□□□ □□ □□□ □□□□□ □ □□□□□□ □□□□□□□ □□□□□□
3 □ OEM / ODM □□□□
□□□□□ □ □□□□□ □□□□ □ 4 fashin □ □□□□□ □□□□ □ □□□□□□□□ □□□□□ □□□
:□□□□□ □□□ □□ □□□□ □ 5
□□□□□□□ □□□ □□□□□□ □□ □□□□ □□□□□□□□ □□□□ □□□□ □□□ □□□□ □ (1
□□□□□ □□□ □□□ □□□□ □□□□□ □□□□ □□□ □□□□□□□□ □□□□ □ (2
□□□□□□□ □□ □□□□□□ □□□□□ □□□ □□ □□□ □□□□□ 3-2 □□□□ □□□□ □□□ □□□□□□□□ □□□□ □ (3
□□□□□□□ □□□□□ □□□□ 30 ~ 7 □ □□□□□□ □□□□□ □□□□ 5 ~ 1 □□□□□ : □□□□ □□□□□ □ 6
□□□ □□□□□ □□□□□ □□□□□ □□□□□ :□□□□□ □ 7: T / T □ □□□ □□□ □ □□□□□□ □□□□□□
□□ □□□ □□□□□ □□□□□ :□□□□□ □ 8 DHL □ FEDEX □ TNT □ UPS □ EMS □ Forwarder by SEA □ By AIR □ □□□□□ □□□□□
□□ □□□□□ □□□□□ □□□□ □□□□□□.

□□□□□□□□□

□□□□ □□□□□ □□□□□□ □□□ .1 :□

□ □□□ □□□□ □□ □□□□□ □□ □□□□□ □□ .□□□□□□□□□□□ □□□□□□ □□□ □□□□□ □□ □□□□□□ □□□□□□□□□□□ □□□ □□□□ :□
.□□□□ □□□ □□□□ □□ □□□□□□□ □□□□□□ □□□□ □□□ □ □□□□□ □□□□□ □□□□

□□□□□□□ □□□□□ □□ □□□□.2 :□

□: T / T □ .□□□□□□ □□□□□□ □ □□□ □□□
□□□□□□□ □□ □□□□ □□ □□□□□ □□□□ □□ □□□□□□□□ □□□□□□□ □□□□ (DHL □ FedEx □ TNT UPS □ (□□□

□□□ □□□□□□ □□□□□□ □□ □□□□□□ □□□□ □□□ □□□□□□ □□□□□□ □□□ .3 :□

.□□□□□□ □□□□ □□□□□ □□□□□□ □ □□ □□□□□□ □□□□ □□□□□ □□□□□□ :□

□□□□□□□□ □□□ □□□□□□ □□□□ □□□□□□ □□□□□ □□ □□ .4 :□

□□□□ 100000 □□□□□ □□□□□ 15-7□ □□□□ 5000 □□□□□ □□□□ 7-3 □□□□□□ □□ .□□□□□□ □□□ □□□□□ □□□ :□

□□□□□□□□ □□□□□ □□□□ □□ .5 :□

□□□□□ .□□□□□□□□ □□□□□□□□ □□□□□□ □□□□□□ □□□ □□ □□□ □ □□□□□□□ □□□□□□□ □□□□ □□□□□ □□□ :□ OEM
.□□□□ □□□□□ □□□□

□□□□□ □□ □□□□□□ □□□□ □□□ □□.6 :□

□□□□□□□ □□□□□□□ □□□□□□□ □□□□ □□ □□□□□ □□□ RFID / □□□□□□ NFC / RFID keybod / RFID wristband □
□□□□ rfid □□□□□ 20 □□ □□□□ □□□ □□□□□ □□ □□□□□□ □□ □□□□□□ □□□□□□□.