## وصف المنتجات

وصف المنتجات

**باب الطوارئ تبديل مفتاح التحكم في الوصول لا يوجد زر مفتاح خروج لمس ACM ACM**

ميزة:
لا لمسة / لمسة مستشعر خروج خالٍ من اللمس (اكتشاف منتشر) .
التكنولوجياً البصرية / الأشعة تحت الحمراء
· IP-55 Ingress Protection / SUS 304 صفيحة من الفولاذ المقاوم للصدأ
· سهل الاستخدام (حماية صحية)
· · خالية من الأمراض المعدية
نطاق الكشف: 0.1 ~ 10 سم
عادةً
التوأم لمستشعر الاستعداد أو المقتربة: LED · مؤشرات
مستشعر الاستعداد (1): LED Blue On

## تفاصيل الصور

تفاصيل الصور

## المنتجين المنتجين

| | |
|---|---|
| رقم النموذج | K-E012 |
| اسم المنتج | لا يوجد مفتاح زر خروج اللمس |
| مادة | الفولاذ المقاوم للصدأ |
| حجم المنتج | 86*86mm |
| جهد إمدادات الطاقة | 12VDC |
| إخراج الاتصال | NO/NC/COM/LED |
| الحد الأقصى الحالي | 3A / 125-250VAC |
| اختبار التحمل | 100000 مرة |
| تثبيت: | **إطار الباب المجوف (التثبيت المخفي)** |
| معلمات التعبئة | 100pcs/15kg/51*43*33cm/ctn |

## تفاصيل المنتجات

# Touchless Sensor Exit Button

## Specification

- **Dimensions**: 86L*86W*26H(mm)
- **Contact Rating**: 12-24V，3A
- **Power**: 12VDC or 24VDC
- **Output Contact**: NO/NC/COM
- **Mechanical Life**:100,000 Tested
- **Suitable for Door**: Hollow Door
- **Logo**: Customizable
- **Weight**: 0.15kg
- **Operating Temp**: -20℃~+55℃ (14~131F)
- **Operating Humidity**: 0-95%(relative humidity)
- **Detection Range**: 5-15cm (Adjustable)
- **LED Indicator**: Blue LED (Standby)
  Green LED (Sensation)
- **Surface Mount:** Optional M86 Metel Back Box
- **Panel:** 0.7mm Thick 304 Stainless steel
- **Package Quantity:** 100PCS/52*43*33cm/ctn

## Product Dimension

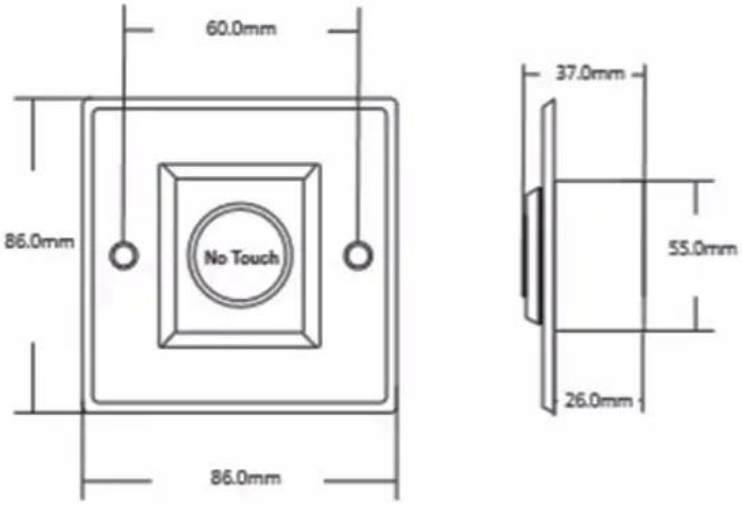

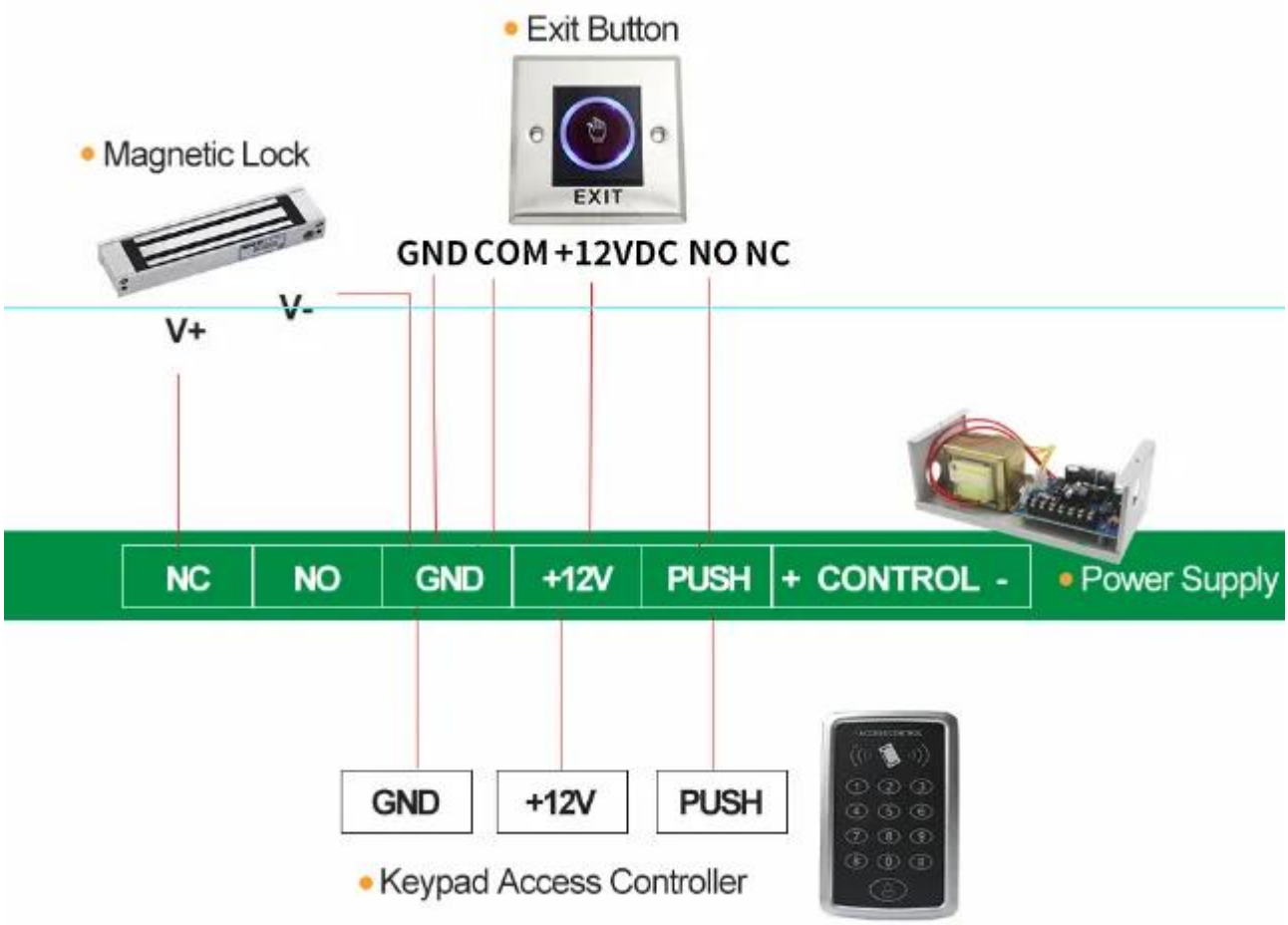

Exit Button
EXIT
Magnetic Lock
GND COM +12VDC NO NC
V-
V+
NC
NO
GND
+12V
PUSH
+ CONTROL -
Power Supply
GND
+12V
PUSH
Keypad Access Controller

يوصي المنتجات

---

يوصي المنتجات
نظام قفل الخزانة
نظام قفل باب الفندق
نظام القفل الذكي في المكتب المنزلي
نظام التحكم في الوصول
نظام وقوف السيارات

المنتجات ذات الصلة

---

ACM

## EXIT BUTTON

Email: **sales@goldbridgesz.com**

**K6A** **K6AL** 91x28x20mm | **K6D** 115x70x25mm | **K6DL** 115x70x25mm | **K6DW** 115x70x25mm | **K4A** **K4AL** 86x50x33mm

**K6B** 86x86x38mm | **K6BL** 86x86x38mm | **K4B** 86x86x33mm | **K4BL** 86x86x33mm

**K14E** **K14EL** 115x40mm | **K14F** 115x70mm | **K14FL** 115x70mm | **K14A** **K13AL** 115x40mm | **K14** 115x70mm | **K14DL** 115x70mm

**K14B** 86x50mm | **K14BL** 86x50mm | **K13B** 86x86mm | **K13BL** 86x86mm | **K13BE** 86x86mm

**K13AB** 115x40mm | **K13A** 115x70mm | **K13D** 86x50mm | **K13BD** 86x86mm | **K14C** 80x30x24mm | **K14CL** 80x30x24mm

**K15A** 53x53x25mm | **K15AL** 53x53x25mm | **K15B** 53x53x25mm | **K15C** 53x53x25mm

**K7A** 91x28mm | **K7B** 115x70mm | **K8A** 86x86x38mm | **K8BL** 86x86x38mm | **K4AC** 86x86x38mm | **K4AD** 86x86x38mm

**K6AM** 115x40mm | **K6BM** 115x70mm | **K6CM** 86x50mm | **K6DM** 86x86mm | **K15BG** 53x53x25mm | **K15BR** 53x53x25mm

**K14BR** 80x30x25mm | **K14BG** 80x30x25mm | **M40** 115x40mm | **M70** 115x70mm | **M50** 86x50mm | **M86** 86x86mm

## TOUCH BUTTON

Email: **sales@goldbridgesz.com**

**K9A** 86x86x20mm | **K9B** 86x50x20mm | **K40A** 86x86x18mm | **K40B** 86x86x18mm | **K40C** 86x40x18mm

## NO TOUCH EXIT BUTTON

**K2B** 86x86x35mm | **K2A** 115x70x25mm | **K9C** 86x86x11.5mm | **K10A** 86x86x14mm

**K201G** 92x92x33mm | **K201** 113x63x20mm | **K406** 80x32x23mm | **K-WS** 80x80x28mm

**K505** Capacitive 86x86x14mm | **K505W** Capacitive 86x86x14mm | **K505MH** Infrared 86x86x14mm | **K505MHW** Infrared 86x86x14mm

**K841A** 115x40mm | **K841C** 115x70mm | **K841B** 86x86mm | **K842A** 115x40mm | **K843A** 115x40mm

## PLASTIC BUTTON

Email: **sales@goldbridgesz.com**

**K1** 86x86x25mm | **K1-1** 86x86x24mm | **K1-2** 86x86x25mm | **K1-3** 86x86x20mm | **K11A** 76x23x14mm

Rated Current: 40A, Power off: 20s delay | **P86** 86x86x35mm | **P77** 77x77x45mm

## EMERGENCY DOOR RELEASE

Email: **sales@goldbridgesz.com**

**K3R** 86x86x50mm | **K3Y** 86x86x50mm | **K3G** 86x86x50mm | **K3W** 86x86x50mm

**K3RR** 86x86x50mm | **K3RG** 86x86x50mm | **K3** 87x87x60mm | Transparent

**K4G** LED/Buzzer Red | **K4GB** LED/Buzzer Green | **K4GL** Without LED 90x93x45mm | **K4RG**

## معلومات الشركة

20+ YEARS EXPERIENCE

# OEM & ODM

## ACCESS CONTROL SYSTEMS ONE STOP SOLUTION PROVIDER

Goldbridge is Top 10 China Manufacture On Alibaba,
Specializes In Provide Kinds Of RFID/NFC Cards, FID Tags, RFID Card Reader, UHF Reader, Access Control System, Electromagnetic Locks, etc Since 1999

Customized Services | Qually Assurance | Fast Delivery | Best After-Sales Service

## ADVANTAGE

### WHY CHOOSE US?

1. **FAST DELIVERY** Faster delivery by air by express. (DHL,UPS or Fedex)
2. **LONG HISTORY** 20 years experience in RFID & Access Control industry
3. **OEM ACCEPTABLE** 20 years OEM&ODM experience for 1000 + VIP client from US and Europe
4. **HIGH QUALITY** Design and manufacture high quality produtcs with 30 R&D; engineers.

# OUR FACTORY

- **Access Control and RFID Reader Production Line:**
- Monthly production quantity is up to 50,000pcs , We are Provides OEM&ODM services including product research and development, LOGO printing, customized.etc

- **Electromagnetic lock & Smart Door Lock Production Line :**
- Monthly production quantity is up to 100,000pcs ,
- Our factory is built with modern manufacture environment, facilities, equipment and professional operation technicians.
- Goldbridge Provides OEM&ODM services including product research and development, LOGO printing and product box customized.

- **RFID & NFC Cards & Tags Production Line :**
- RFID Tag, Wristband, Keyfob: 11,000,000pcs (monthly output)
- Four Production Lines For Smart Card, PVC Card, Prelam Sheet: 20,000,000pcs (monthly output)
- Goldbridge Provides OEM&ODM services for LOGO printing, development, customized.

# APPLICATION

Bus, supermarket,school, government, hospital, factory

# CERTIFICATE

Access Control CE | Access Control Rohs | EM Lock EMC Certificate | EM Lokc ROHS Certificate

RFID Card Reader CE | RFID Card Reader Rohs | UHF Reader CE Certifiate | UHF Reader ROHS

# PRODUCT CATEGORY

## RFID / NFC SMART CARD

**Be customized according to you need**

Fit for systems of transport, E-payment, Access Control, Event, Loyalty, ect.

View More

## ACCESS CONTROL SYSTEM

Security for All: Network Access Control Board ,Standalone Access Controller, Biometric Access Control, T&A time attendance, Facial Access Control

View More

## RFID & LONG RANGE UHF READER

**20+ Years of professional Experience in production of rfid uhf hardware**

- UHF desktop reader writer,
- UHF integrated reader,
- UHF R2000 fixed reader,

View More

## ELECTRONMAGNETIC LOCK

**Professional Electric Locks Manufacturer In China**

Electromagnetic lock with OEM & ODM since 1999 60KG /110KG /180KG /280KG /350KG /500KG

View More

# FAQ

**Q1 How can I place an order?**

A1 Click start to order or list your requirement to us by email. Then we will send the offer to you ASAP, after the order confirmed, we will arrange production ASAP.

**Q2 What about the payment and shipment?**

A3 T/T , Paypal, Western Union etc.
You can choose your agent or via our agent by sea, air or express (DHL,FedEx, TNT UPS etc.)

**Q4 How can I get a sample to check your quality?**

A4 We could provide the sample to you, pls check the sample cost and freight cost with us.

**Q5 How long can I expect to get the goods?**

A5 It depends on the quantity and shipping way. You can check with us before ordered.

**Q6 Can your products be customized?**

A6 Almost all of our products are customized , including the material, size, thickness and printing. OEM orders are highly welcome.

Contact Us

BACK TO HOMEPAGE