[illegible] Deadbolt [illegible]

ACM-Y138 [illegible] .[illegible] / [illegible]

[illegible]

5

DC12V(

DC24V)

4
m
a
.
(
Y
-
1
3
8
N
O
)
(
Y
-
1
3
8
N
C
)

[illegible]: [illegible] PVC [illegible] +20°C [illegible] -1~+55°C (14-131F)

~
9
(
)
.
6

□□□□ advanatge

ACM-Y138. □□□□□ □□ □□□□ .□□□□□ □□□□ □□□□ □□□□ □□□□□□□ □□□□ □□□ □□ □□□□□□□□ □□□□□□□□□ □□□□□□□ □□□ □□ 2 □□□□ □□□□□□□ □□□ .□□□□□□□ □□□ □□□□□ □□ □□□□ □□ .□□□ / □□□□ □□□□□□□□□□□□□□□ □□□□□□ □□ □□□□□□□ □□□□□□□□□□□ □ □□□□□□ □□□ □□□□□□ :□□□ □□□□□ power-to-lock.it □□□□□□□ □□□□□□ □□□□□ □□□ □□ □□□□□□ □□□□ □□□□□□□□□□ □□ □□□□□ □□□□□□□ □□□□□□ deformation.it □□□ □□□□□□□ □□□□□□ □□□□ □□□ □□□□□□ □□□ □□□□□ □□□ □□□□□□□ □□□□□ □□□□□□.

□□□□□ □□□□ OEM / ODM □□□□□□□

ACM-Y138 NO / NC □□□□□ □□□□ □□□□ □□□□□□□□ □□□□ □□ :□□□□□ □□ □□□□□ □□□□□ .□□□□ □□□□ □□ □□□□□□□□□ □□□□□□□ □□ □□ □□□□ □□□□□□□□□□ □□□□□□□ .□□□□ □□□□ □□□ □□□□□ □□□□ □□□□□ □□□□□ □□□□□□□□□ □□□□□□□ .□□□□□□□ □□□ □□□□□□ □□□ □□□□□□□ □□ □□□□□□.

01 Strong and Durable

Stainless steel panels,stable and durable.

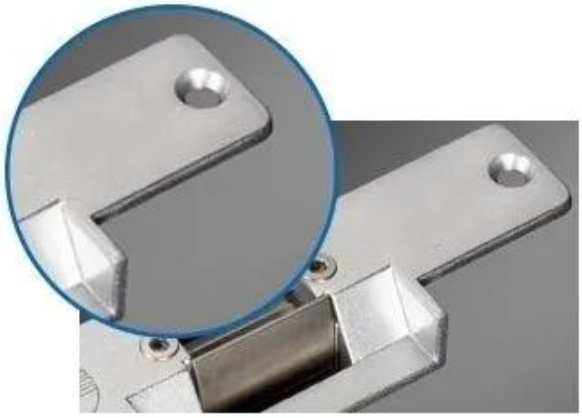

02 Metal Shell

Designed for Metal Frame drill a hole,then install it directly.

03 Special Design

Adjust Lock-tongue to NO style

□□□□□ □□□□□□□ □□□□□□□ □□□□□□□□□□□□ □□□□□□ □□□□ □□□□□□□□ □□□□□□□ □□ □□□□□□ (NC / NO)

04 Low Power Design

05 Rugged combination,Security Guarantee

□□□□□□□ □□□□

- □□□□ □□□□□□□□□ □□ □□□□□□ □□□□□ □□□ □□ □□□ □□□□□□ □□□□ □□□□□ □□□□ ACM Goldbridge □□□□□□□□□ □□□□□ □□□□ □□□□ .□□□□□□□

□□□ □□□□ □□ □□□□□ □□□ - ACM Goldbridge CAHRGE .□□□□□□□ □□□ □□□ □□□□□

□□□□□□□ □□□□ □□□□□□□ □□□□ □□□□□□□□□□ □□ □□□□ -.

□□□□□□□□ □□□□

01

Embedded Installation Design

Safe design to prevent external malicious lock slot is forcedopen.

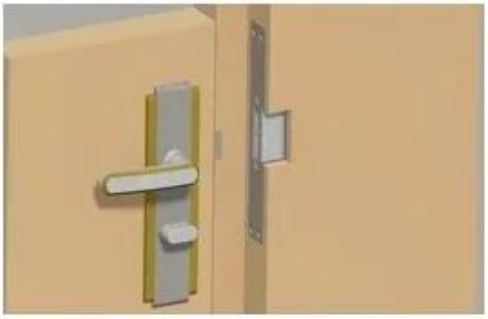

02

Holding Stength

pass 500kg super linear static

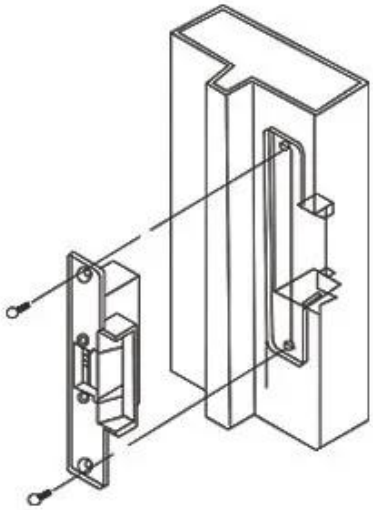

03

Suitable For

Narrow Wooden Door,Narrow Metal Door

□□□□□□□□□ □□□□□□□□

□□□□□□ □□□□□

□□□□□□□ □□□□□ □□□□ □□ □□□□□ □□□□□□□□ □□□□□□□ □□□ □□□ □□ □□ □□□ □□ □□ □□□□□□□ □□□ □□□ □□ □□ □□□ □□□□□ □□□□□
.□□ □□□□□ □□□□□ □□□□ □□□□□□ □□□□ □□□□□

□□□□□□□□□ □□□□□□□□

1 :□□□□□□□□ □□□□□□□ □□□ □□□□unit 60 □□□□□□ □□□pcs □□□□□□□ □□□

ACM-Y130 (NO/NC)
10-8888-6
Standard Type electronic Stripe
1PCS
Made in China
ACM-Y130 (NO/NC)
10-8888-6
Standard Type electronic Stripe
1PCS
Made in China

ACM-Y130 (NO/NC)
10-8888-6
Standard Type electronic Stripe
1PCS
Made in China

□□□ □□□ □□□□□□

□□□□□□ □□□□ □□□□□ □□ □□□□ □□□□□ □□ □□□□□ □□□□□ 20 □□□□ □□ □□□□□□ □□□□□ □□□□ □□ □□□□□□ □□□□□□ □□□□ □□□□□□□ □□□ !□□□□ "□□□□" □□□ □□□□ □□□□□□ □□ □□□□□□□□ □□□□□□ □□□□ □□□□□ !□□□□□□ □□
□□□□□□□□ □□ □□□□□□ □□□□□ □□□□ □□ □□□ □□□□□ □□ □□□□□ □□□□□□ □□□□□□ □□□□□ □□□ □□□□□ □□□□.

ACM-Y130.

□□□□□□□□ □□□□ □□□□□ □□□ (NC / NO) □□□ □□□□□□ □□□ □□□□□□□□ □□□□□□□ □□□□□□□ □□□□□□ □□□□

ACM-Y131.

□□□□ □□□□□ □□□□□□□ □□□□□□□ □□□□□□□□□□□ (NC / NO) □□□□□□□ □□□□□□□□□ □□□ □□□□□□ □□□ □□□□□□□□

ACM-Y132.

280 □□□□□□□□□ □□□ (□□□ 600) □□□□□□□□□ □□□ □□□□□ □□□ :□ □□□□□ □□□□ □□□ □□□ □□□□ □□□ □□□□□□ □□□ □□□□□□ □□□□□□□.