□□□□□□ □□□

□□□□□□ □□□□□□□ □□□□□□ □□□□□□ □□□□□ □□□□□□ □□□□□□ □□□□□□ □□□□□ □□□□□□ □□ □□□□ □□□□ □□□□□ □□ □□□□ □□□□ □□□□□

□□□□□□ □□□□:	12 10 □□□□□ □□□□ □□□□%
□□□□□ □□□ □□:	1
□□□□□ □□□□□	1
□□□□□□□□ □□□□□□ □□□□□	□□ / □□□
□□□□:	2 □□□□
□□□□□□□ □□□:	1
□□□□□□□□□ □□□□□ □□□□□:	□□□□□□□□) 32/34/ 26 □□□□□□□ EM□ 13.56 □□□□ □□□□□ TI□ □□□□ □□□□□ □□□□□□□ □□□□□ IRIS...)

□□□□□□□ □□□□□:	1-600 □□□□□□□ □□□□ □□□□□
□□□□□□ □□□□□□□ □□□ □□□□□□□ □□□:	□□□□ □□
□□□□□□□ □□□□□□□□:	□□□□
□□□□□□□ □□□□□□□ □□□□:	100 □□ □□□ TCP/IP
□□□□□□□ □□□□□□□:	-40 - 70
□□□□□□ □□□□	12 □□□□□ □□□□ □□□□
□□□□□□□ □□□□□□	10.000
□□□□□□□ □□□□□ □□□□□	30.000
□□□□□□□□ □□□ □□□□□	□□□□□□□□ □□□□□ □□ □□□□ □□□□
□□□□□□□ □□□□□□	100 □

□□□□□□ □□ □□□□□□ □□□□□□ □□□ □□□□□

-1□ □□□□□ □□□□□ □□□□□ □□□□□□ □□□□ □□□□□ □□□□□
□□□□□□ □□□□□□□ □□□□□ □□□□□ □□ □2-
□□□□□□ □□□□□□ □□□□□ □□□□□ □□□□□ □□□□□□□□□□ □□□□ □3-
□□□□□□□ □□□□□□□□ □□□□□□□□ □□□□ □□□□□□□□ □□□□ □□□□□□ □4-
□□□□□□ □□□□□ □□□□□□□ □□□□□ □□□□ □□□□□ □5-
□□□□□ □□□□□ □□□□□ □6- IP68 □□□□□□□ □□□□□□□□□□
□□□ 2000 □□□□□□□ □□□□□ 2000 :□□□□□ □7-
□□□□□ □□ □□□□□□□ □□□□□□ □□□□□□□□□ :□□□□□□ □□□ □8-
□□□□ 0.1 □□□□ □□□□□ □□□□ □□□□□□□ □□ □□□□□□ □□□□□□□ □□□ □□□□ □□□□□ :□□□□□□□ □□□ □□ □□□□□ 9-
□□□□□
□□□□□□ □□□□□□ □□□□ □□ □□□□□□□□ □□□□□□□□□ □□□□□□ □□□□□□□ □□□□ □10-
□□□□□ 99 □□□ 0 □□ □□□□□□□ □□□□ □□□□□ □□□□□ □□□ □11-
□□□□□□ □□□□□ □□□ □□ □□□□□□□□□ □□□□□□□ □□□□ □12-
□□□□□ □□□ □□□ □□□□□□□□ □□□ □□□□□□□□ □□□□ □□□□□ □□□□□ □□□ □13-
□□□□ □14- WG W26 □ □□□□□□□W34 □□□□□□
□□□□□ □□□□□ □□□ □□□□ □□□□□□□ □□□□ □15- WG26 □□□□
□□□□□ □□□□ 30 □□ □□□ □□□□ □□□□ :□□□ □□□□ □16-

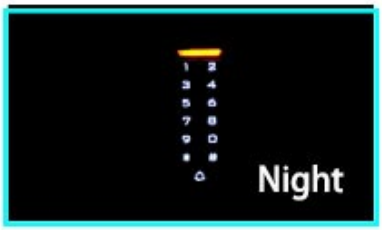

□□□ □□□□□□ □□ □□□□□□ □□□□□ □□□□□ □□□□ □□ □□□□□□ □□□□ □□□□ RFID□ □□□□□ □□□□ □□ □□□□ □□□ wiegand 26 2 □□□□□ □□□□ □□□□□ □□□□□ □□□ □□□□ .□□□□□ □□ □□□□□□ □□□□□□ □□□□□ □□□□□□□ □□□□□ □□□□.

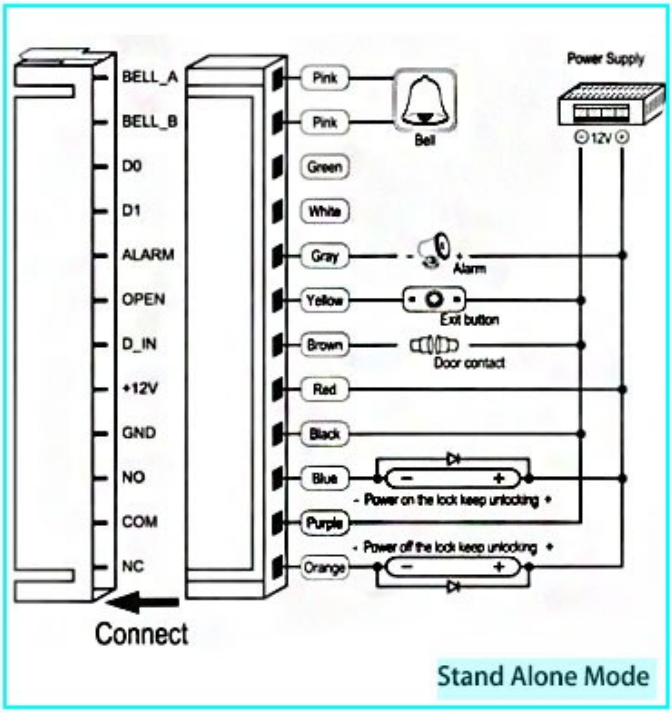

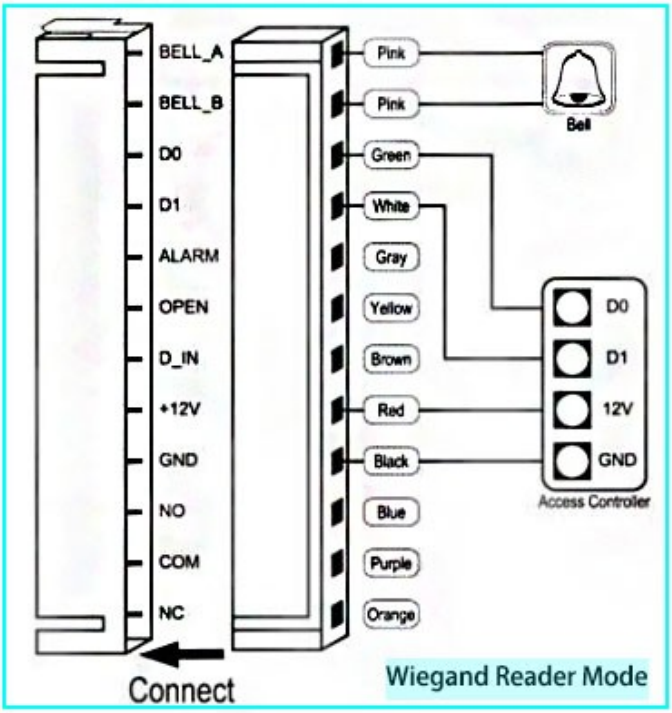

□□□ □□□ □□□□□□:

SHENZHEN GOLDBRIDGE INDUSTRIAL CO.,LTD

— METAL ACCESS CONTROL —

ACM-0103

ACM-100

ACM-500

ACM-N1

ACM-600

ACM-601

ACM-602

ACM-603

ACM-CC1

ACM-CC2

ACM-CC3

ACM-K5

ACM-K6

ACM-K8

ACM-K9

ACM-K10

ACM-H1

ACM-H2

ACM-H3

ACM-H4

ACM-SK2

ACM-SK4

ACM-SK5

ACM-SK6-X

ACM-K7

ACM-S7

ACM-K8

ACM-S8

ACM-S99

ACM-M2

ACM-S5

ACM-S6

ACM-S99

ACM-M2

ACM-S5

ACM-S6

www.goldbidgesz.com ;sales@goldbridgesz.com

صورة مفصلة

□□□□ □□□□ Wiegand 26□ □□□□□□□□ □□□□ □□□ □□□ □□□□□□ □□ □□□□ □□□□□ □□□□□□□□ □□□□□

□□□□□□

1□ □□□□ 24 □□□□ □□ □□□□□□□□□ □□ □□□ □□□□ □□□□

2□ □□□□□□□ □□□□□□□□ □□□ □□□□□□ □□□□□ □□ □□□ □□□□□ □□□□□□□□ □□□□□□□□ □□□□□□□ □□□□□□

□□□□□□□ □□□□□□ □□□□□□□ □□□□□/□□□□□□□ □□□□□□□ □□□□□ □3

□□□□□ □□□□ □□□□□□□□ □□□□□ □□□ □□□□□□ □□□□□ □□□□□□ □□□□ □4

:□□□□□ □□□ □□ □□□□ □5

□□□□□□□ □□□ □□□□□□ □□ □□□□ □□□□□□□□ □□□□ □□□□ □□□ □□□□ □ (1

□□□□□ □□□ □□□ □□□□ □□□□□ □□□□ □□□ □□□□□□□□ □□□□□ □(2

□□□□□□□ □□ □□□□□ □□□□□ □□□ □□ □□□ □□□□□ 3-2 □□□□ □□□□ □□□□□ □□□□□□□□ □□□□ □(3

□□□□□□□ □□□□□ □□□□ 30 ~ 7 □□□□□□ □□□□□ □□□□ 5 ~ 1 □□□□□ : □□□□□□□ □□□□ □6

□□□ □□□□□ □□□□□ □□□□□ □□□□□ :□□□□□ □7: T/T□ Western Union□ Paypal□ Ali □□□□□□□ □□□□

□□ □□□ □□□□□ □□□□□ :□□□□□ □8 DHL□ FEDEX□ TNT□ UPS□ EMS□ □□□□□ □□□□□ □□□□□□ □□□□□ □□□□ □□ □□□□□ □□□□

□□ □□□□□ □□□□□ □□□□ □□□□□□.

□□□□□□□□□□

□□□□□□ □□□□□ □□□□□□ □□□ .1 :□

□□□ □□□□□□ □□□□□ □□□□ □□□□ □□□□ □□ □□□□□ □□ □□□□ □□□ □□ .□□□□□□ □□□ □□□ □□□□□□□□ □□□ □□□□ :□
.□□□□ □□□ □□□□ □□ □□□□□□□ □□□□□□ □□□□

□□□□□□□ □□□□□ □□ □□□□ .2 :□

□ □□□□□□□ □□□□ :□ T/T □ Paypal □ .□□□□□□ □□□□□□
□□□□□□ □□ □□□□ □□ □□□□□ □□□□ □□ □□□□□□□□ □□□□□□□ □□□□ (DHL□ FedEx□ TNT UPS (□□□ □□□ □□□

□□□ □□□□□□ □□□□□□ □□ □□□□□□ □□□□ □□□ □□□□□□ □□□□□□ □□□ .3 :□

.□□□□□□ □□□□ □□□□□ □□□□□□ □□□ □□□□□□ □□□□ □□□□□ □□□□□□ :□

□□□□□□□□ □□□ □□□□□□ □□□□□ □□ □□□□□□ □□□□□ □□ □□ .4:□

□□□□ 100,000 □□ □□□□□ 15-7□ □□□□ 5000 □□ □□□□ 7-3 □□□□ .□□□□□□ □□□ □□□ □□□□□ :□

□□□□□□□□ □□□□□ □□□□ □□ .5:□

□□□□□ □□□□□ .□□□□□□□□ □□□□□□ □□□□□□ □□□□□□ □□□ □□ □□□ □□□□□□□□ □□□□□□□ □□□□ □□□□□ □□□ :□
.□□□□ □□□□□ □□□□ □□ □□□□□□□ □□□□□□□

□□□□□ □□ □□□□□□ □□□□ □□□ □□ .6 :□

□□□□□□□ □□□□□□□ □□□□□□□ □□□□ □□ □□□□□ □□□ RFID / □□□□□□ NFC / □□□□□□ □□□□ RFID / □□□□ □□□□
RFID □□□□□ rfid □□□□□ 20 □□ □□□□ □□□ □□□□□ □□ □□□□□□ □□ □□□□□□ □□□□□□□.

□□□□□□ □□□□□□□:

20+ YEARS EXPERIENCE

OEM & ODM

ACCESS CONTROL SYSTEMS ONE STOP SOLUTION PROVIDER

Goldbridge is Top 10 China Manufacture On Alibaba,
Specializes In Provide Kinds Of RFID/NFC Cards, FID Tags, RFID Card Reader, UHF Reader, Access Control System, Electromagnetic Locks, etc Since 1999

- Customized Services
- Qually Assurance
- Fast Delivery
- Best After-Sales Service

OUR FACTORY

- **Access Control and RFID Reader Production Line:**
- Monthly production quantity is up to 50,000pcs , We are Provides OEM&ODM services including product research and development, LOGO printing, customized.etc

- **Electromagnetic lock & Smart Door Lock Production Line :**
- Monthly production quantity is up to 100,000pcs ,
- Our factory is built with modern manufacture environment, facilities, equipment and professional operation technicians.
- Goldbridge Provides OEM&ODM services including product research and development, LOGO printing and product box customized.

- **RFID & NFC Cards & Tags Production Line :**
- RFID Tag, Wristband, Keyfob: 11,000,000pcs (monthly output)
- Four Production Lines For Smart Card, PVC Card, Prelam Sheet: 20,000,000pcs (monthly output)
- Goldbridge Provides OEM&ODM services for LOGO printing, development, customized.

ADVANTAGE

WHY CHOOSE US?

1. **FAST DELIVERY** Faster delivery by air by express. (DHL,UPS or Fedex)
2. **LONG HISTORY** 20 years experience in RFID & Access Control industry
3. **OEM ACCEPTABLE** 20 years OEM&ODM experience for 1000 + VIP client from US and Europe
4. **HIGH QUALITY** Design and manufacture high quality produtcs with 30 R&D; engineers.

APPLICATION

Bus, supermarket,school, government, hospital, factory

CERTIFICATE

Access Control CE | Access Control Rohs | EM Lock EMC Certificate | EM Lokc ROHS Certificate

RFID Card Reader CE | RFID Card Reader Rohs | UHF Reader CE Certifiate | UHF Reader ROHS