□□□□

ACM SHENZHEN GOLDBRIDGE INDUSTRIAL CO.,LTD

8 INCH

thermal imaging temperature measurement
Face recognition specifications

型号

Product characteristics

Product advantage

1.Adopt high-performance intelligent processor,face recognition algorithm based on deep learning,greatly improve the rate of face capture.

2.Support real-time temperature detection and high temperature alarm.

3.Support face optimization,face enhancement and face exposure to improve imaging quality.

4.Support live anti-counterfeiting,based on facial biometric recognition,can not be replaced and copied, to prevent counterfeiting operations.

Non touch temperature measurement is safe
Voice Announcements

Identify success

Warning of abnormal temperature

>>> 1. SPECIFICATION:		
Camera	Pixel	200Wpixels
	Type	RGB、Infrared dual camera
	Aperture	F2.4
	Focal Distance	50-150cm
	white balance	automatically
	Fill Light	LED & Infrared double fill light
Screen	Size	8.0inch IPS LCD screen
	Resolution	800x1280
	Touch sensor	No
processor	CPU	RK3288 Quad-core
	Local storage	EMMC 8G
Ports	Internet	Ethernet、Wi-Fi
	Audio	2.5W/4R horn
	USB ports	USB*2 HOST standard A
	Serial -communication	RS232*1
	Relay output	1 single output
	Wiegand interface	26/34output*1 26/34input*1
	Upgrade buttom	Leave the Uboot upgrade button on the device line
	Wired Network	RJ45*1
	Face library support	Up to 30,000
	1: N face recognition	YES
	1: 1 face comparison	YES
	Stranger detection	YES
	Identify distance configuration	YES
	UI interface configuration	YES
	Device Ports	Equipment management, personnel / photo management, record query, etc.
	Deployment method	Support public cloud deployment, privatized deployment, LAN use
Infrared thermal imaging module	Temperature detection	YES
	Temperature detection distance	1 meter (≅0.5 meter)
	Temperature measurement accuracy	≤ ±0.2℃
	Temperature measurement range	10℃~42℃
	Thermal Field of View	32 X 32℃
	Normal temperature release	YES
	Over temperature alarm	YES
General parameters	Protection class	IP65,outdoor dustproof & waterproof function
	power supply	DC12V（±10%）
	Operating temperature	0℃~60℃
	Storage temperature	-20℃~60℃
	Power consumption	13.5W（Max）
	Installation method	Gate brackets
	Equipment size	238.24*128*21.48（mm）
Packing Info	G.W.	1.45kg
	Machine * 1, power adapter * 1, manual * 1, certificate of conformity * 1	

INSTALLATION NOTES

Module structure description

Terminal description

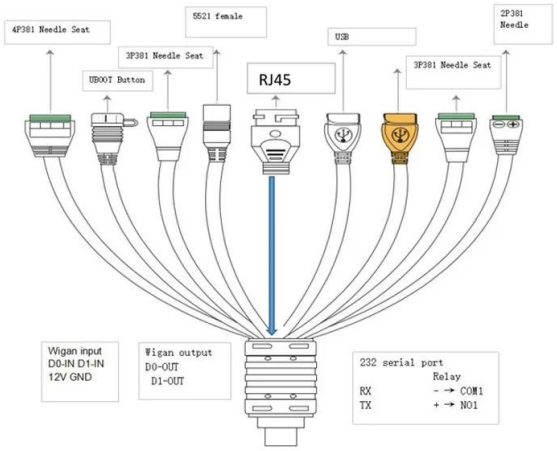

INSTALLATION METHOD (inevitable with SV-1081D

1

According to the requirements of the installation site, open a 35mm diameter hole in the space position of the gate (usually the middle or front side) (as shown in the below)

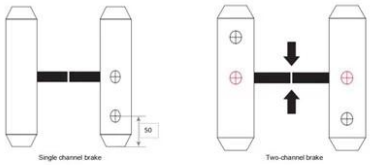

(Noted: The opening position should be based on the actual gate type and scene, and 35mm is only a reference value)

2

Unscrew the nut at the bottom of the gate head post, thread the cable out of the nut, and remove the nut.

3

Under the gate, pass the cable and cable interface through the gasket and nut in turn, tighten the nut, connect the power supply, and start the screen

CARE & MAINTENANE

1. During the installation and use of the product, all electrical safety regulations of the country and the area of use must bestrictly observed.
2. Please use the power adapter provided by regular manufacturers. For the specific requirements of the power adapter,please refer to the product parameter table.
3. When installing on the gate, please make sure that the product is installed firmly.
4. If the product does not work properly, please contact the after-sales service personnel. Do not disassemble or modify the product in any way. (The company does not assume any responsibility for problems caused by unauthorized modification or
5. Do not immerse the product in water. When installing outdoors, try to use it with the rain cover provided by our company.
6. Please understand that you are responsible for properly configuring all passwords and other related product security settings, and keeping your username and password properly.
7. If the equipment does not work properly, please do not disassemble it for repair, otherwise it will affect the equipment
8. Avoid extreme or extreme environments such as extreme high temperature (or low temperature), high humidity, vibration,radiation, and chemical corrosion during installation and use.

WARRANTY DESCRIPTION:

1. This warranty card is required to be properly kept by the user as a proof of repair.
2. This product is guaranteed for one year from the date of purchase.
3. Warranty Equipment During the warranty period, under normal use and maintenance conditions, the machine itself malfunctions. Upon inspection, the company will provide free repair and parts replacement.
4. During the warranty period, if the following events occur, the company has the right to refuse service or charge materials and maintenance service fees as appropriate.

1) This warranty card and valid proof of purchase cannot be provided.
2) product failure and damage caused by improper user use.
3) abnormal external force damage.
4) non-Our company's maintenance services, the user dismantled and caused damage.
5) Failures and damage caused by natural disasters or other force majeure factors.
6) Others intentionally damaged it.

5. The company reserves the right to modify and interpret all contents.