VALVE REGULATED LEAD-ACID BATTERY
6-FM-7.2
12V7.2AH/20HR(25°C)
CONSTANT VOLTAGE CHARGE
● CYCLE USE:14.5 ~ 14.9V
● STANDBY USE:13.5 ~ 13.8V
● INITIAL CURRENT:LESS THAN 2.16A
CAUTION
● AVOID SHORT CIRCUIT
● DO NOT CHARGE IN A SEALED CONTAINER
Pb
Pb

□□□□□□□□12V 7A□□□□

□□□□□

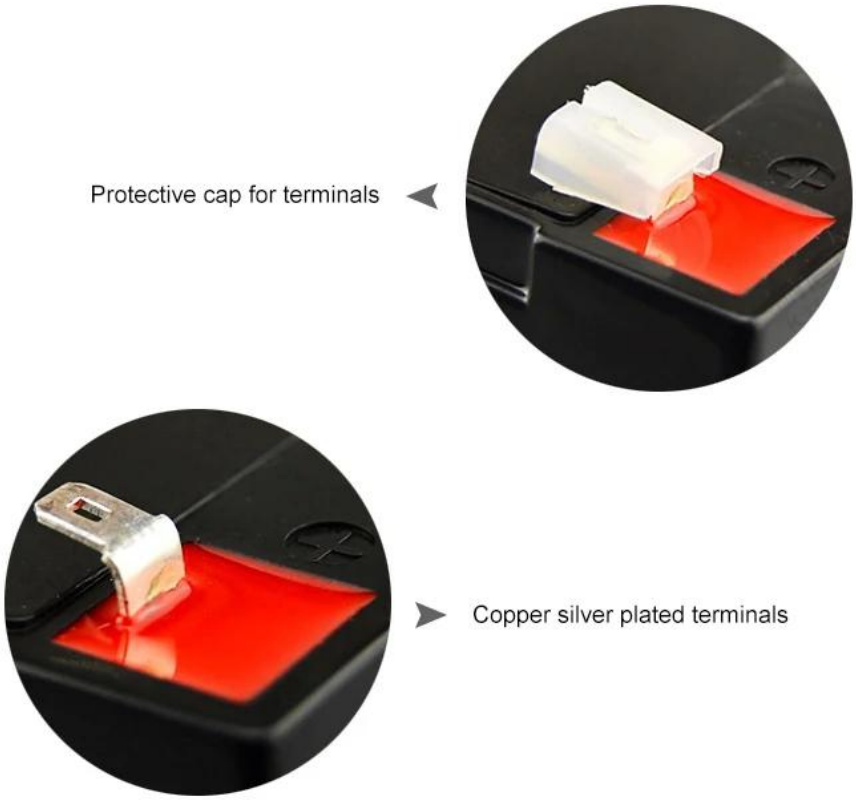
Protective cap for terminals
Copper silver plated terminals

□□

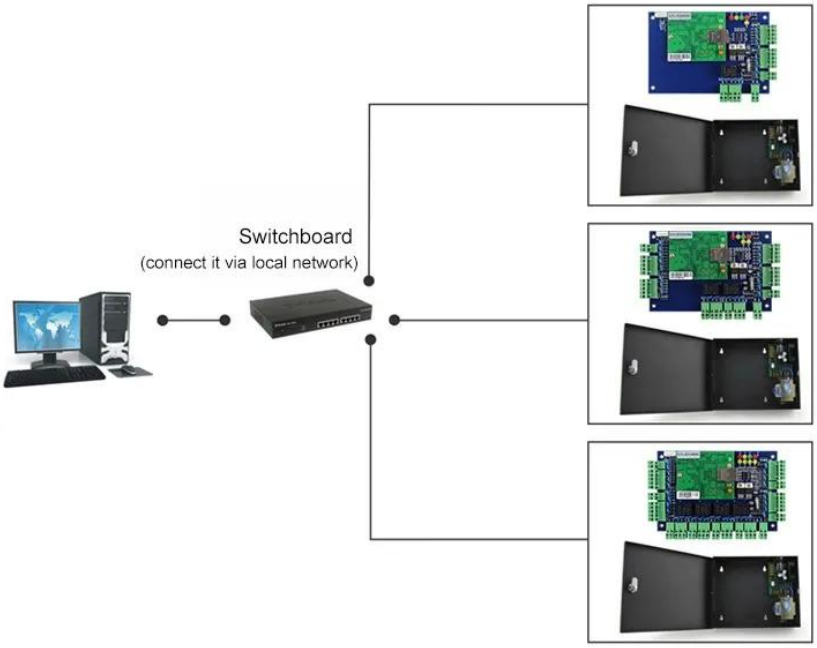

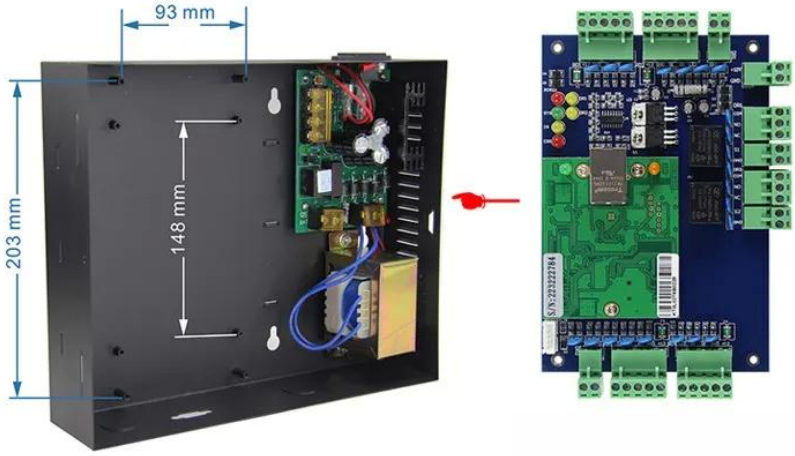

Kindly remind:

All network control board must configure with access power supply.
1 board for 1 power supply

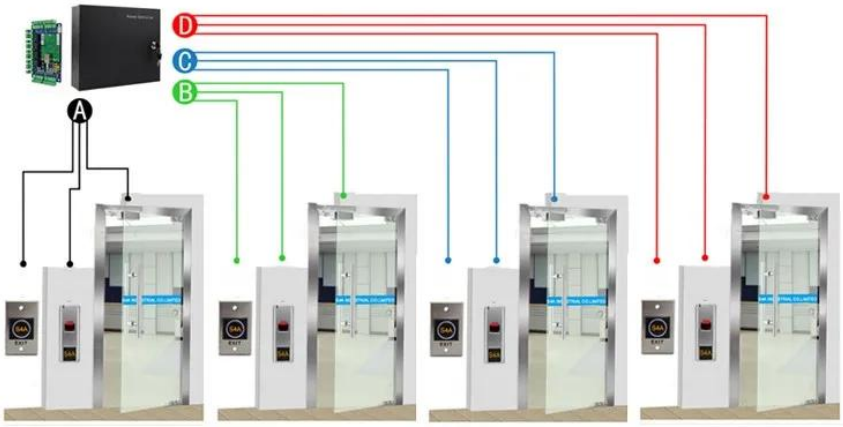

ACM-WEG04

Four doors 1 way: Control 4doors (Enter by Swipe cards and Exit by Push button)

□□□□□

□□□□□□□□□□□□□□□□□□□□□□□
□□□□□□□□□□□□□□□
□□□□□□

□□□□□□□□□□□

□2000□□□□□□□□□□□□RFID□□□□□□□□□□□□□□□□□
□□□□□□□□□□□□□□□□□□□□□□□□□□□□/□□□□□□□□□□□□
□□□□□□□□□□□□□□□□□□□□□□□□□□□□CO□FTA□□□F□
□□E ...□□□□□□□□□□□□□□□□□□□□□□
EXW□FOB□FCT□CIF□CFR ...□□□□□□□□□□□□□□□□
□□□□□□□□□□□□□□□□

[□□□□□□□□3□□□□□□□□!!!]()

□□□□□□□□□□□□□□□□□□□□20□□□“[□□]()“ □□□

□□□□□□□□□□□□□□□□□□□□□□□□□□□□□□

□□□□

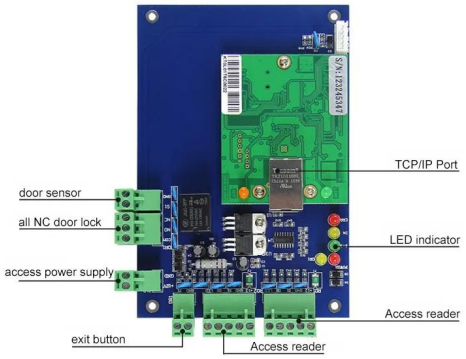

ACM-WEG01

□□□□□1□□

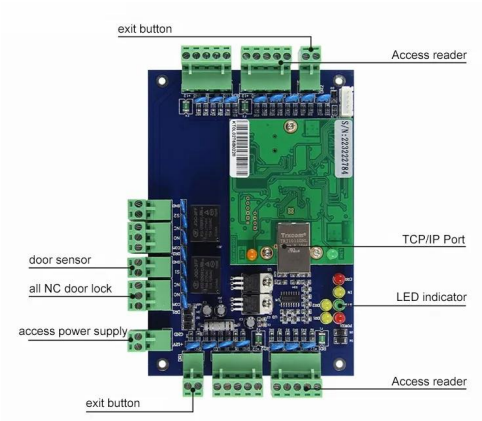

ACM-WEG02

□□□□□2□□

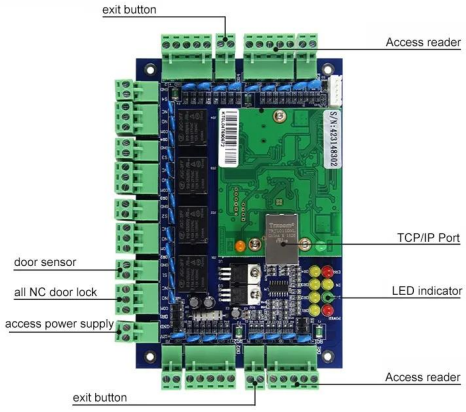

ACM-WEG04.

□□□□□4□□

You May Like

ACM-K2A / B.

□□□LED□□□□Realese□□□□

ACM-Y280

□□□□□□□280kg / 600□□

ACM-Y806-5A

□□□□□□□□□5A

ACM225

□□□□RFID□□□□12kHz

ACM-210.

□□□□RFID Wiegand□□□□

ACM26x.

125KHz EM□RFID□□□□
□□115mm×75.5mm×16.8mm

□□□□

ACM□□Goldbridge□□□□

□□□□RFID□□□□□□□□□□□□□□□□□□□□□□□20□□□□□□RFID□□□□□□□□□□□□□□□□□□□□□□□□RFID□□RFID□□□RFID□□□RFID
□□□□□RFID□□□□□□□□□□□□□□□□□□□□□

□□□□□

□□□□□□□□□□□□□□□□

1.□□□□□□□□ 24□□□
2□ □□□□□ □□□□□□□□□□□□□□□□□□□□
3.OEM / ODM□□
4. □□□□□□□□□□□□□□□□□□□□□□□□□□□□
5.□□□□□ □
□□□□□□□□□□□□□□□□□□□□□□□□□□□□
B□□□□□□□□□□□□□□□
C□□□□□□□□□□□□□□□□□□□□□□□□□□□□2-3□□□
6□ □□□□□ □□□□□□□1□5□□□□□□□7□30□
7□ □□ □□□□□□□□T / T□Western Union□PayPal□Ali□□□□□□□□□
8□□□□□□□□DHL□FedEx□TNT□UPS□EMS□□□□□□□□□□□□□□□□□□□□□□□□□□□□□□□□□□□□

□□□□

1.□□□□□□□□□□□□□□□□□□□□□□□□□□□□ACM Goldbridge□□□□□□□□2□□□□
2.□□□ACM Goldbridge□□□□□□□□□□□□□□
3.□□□□□□□□□□□□□□□□□□