AC180□235V 5A□□□□□□□

5A□□□□

□□□□□□□□□□□□□□□□□□

□□□□□□□□□□□□□□□□□□□□□□□□□□□□□□□□□□□□

□□□□□□□□□□□□□□□□□□□

4
5
x
2
7
7
x
7
7
m
m
A
C
1
1
V
-
2
4
V
5
W
D
C
1
2
V
;
/
n
c
.
-
1
5
S
.

□□□□□

Dimensions(mm)
264mm
L374 x W264 x D67mm
67mm
374mm
277mm
Access Control System
77mm
405mm
Size: L405 x W277 x D77mm
Weight: 3.28kg

□□

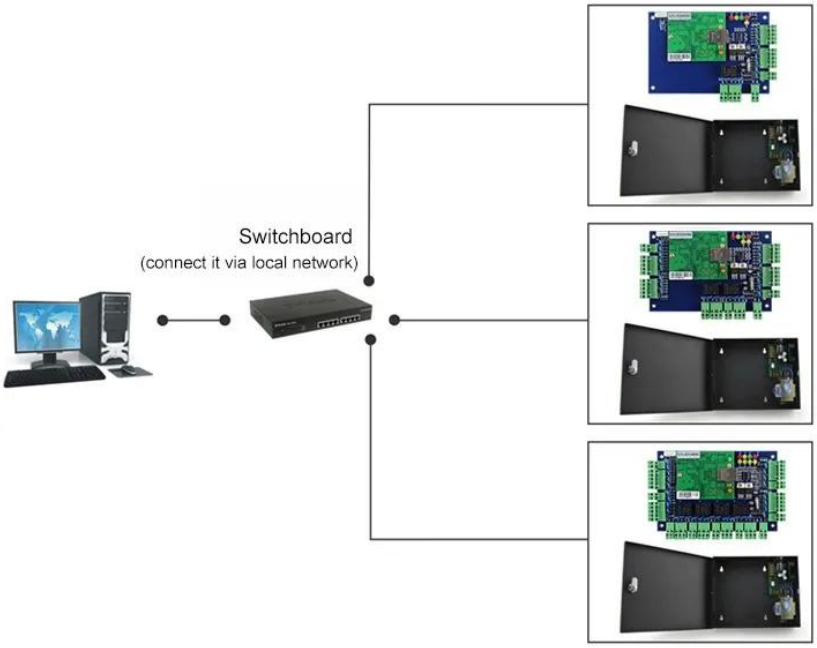

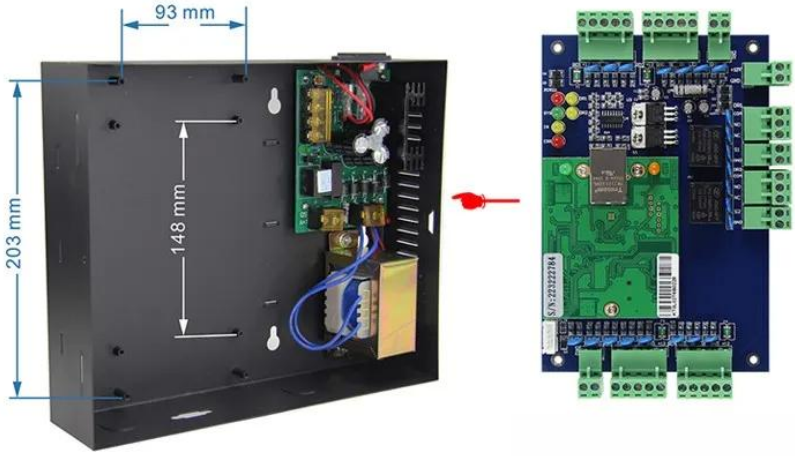

Kindly remind:

All network control board must configure with access power supply.
1 board for 1 power supply

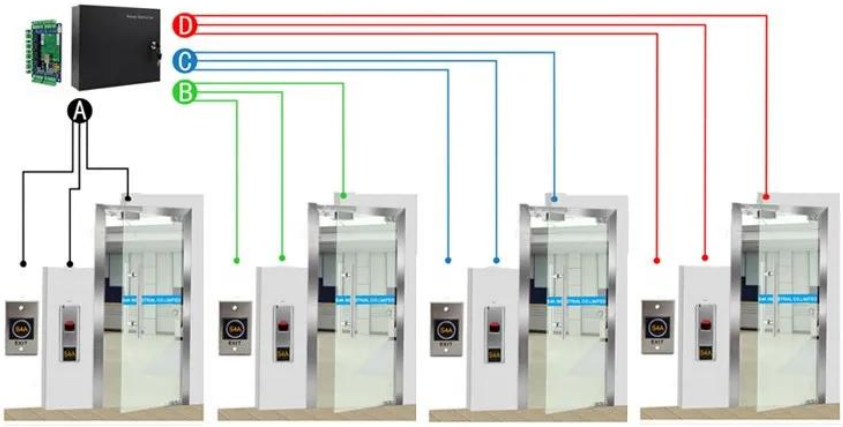

ACM-WEG04

Four doors 1 way: Control 4doors (Enter by Swipe cards and Exit by Push button)

Scope of Application
Company
Hospital
Hotels
Logistics
Port
Financial
Government
Factory
Aviation
School

□□□□□

□□□□

□□□□□□□□□□□□□□□□□□□□□□□□□□□□□□

□□□□

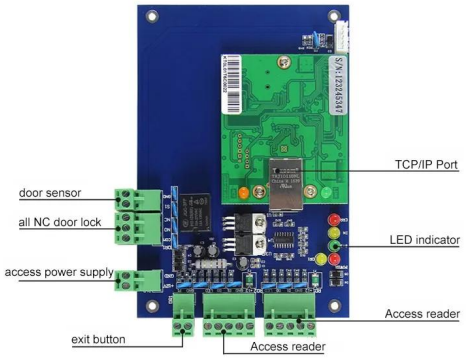

ACM-WEG01

□□□□□1□□

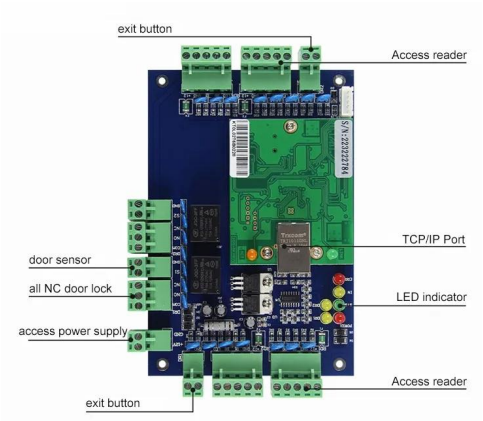

ACM-WEG02

□□□□□2□□

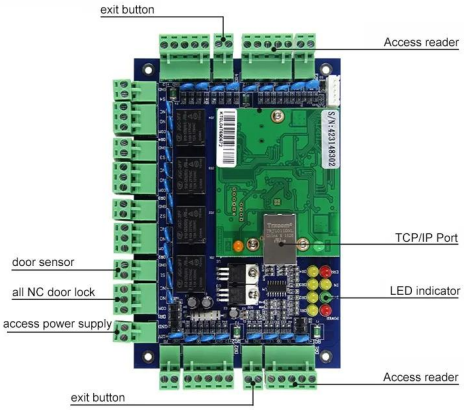

ACM-WEG04

□□□□□4□□

You May Like

ACM-K2A / B.

□□□LED□□□□Realese□□□□

ACM-Y280

□□□□□□□280kg / 600□□

ACM-Y806-5A

□□□□□□□□□5A

ACM225

□□□□RFID□□□□12kHz

ACM-210

□□□□RFID Wiegand□□□□

ACM26x.

125KHz EM□RFID□□□□
□□115mm×75.5mm×16.8mm

□□□□

ACM□□Goldbridge□□□□

□□□□RFID□□□□□□□□□□□□□□□□□□□□□□□□□□□□20□□□□□□□RFID□□□□□□□□□□□□□□□□□□□□□□□□□□□□□□□RFID□□RFID□□□RFID□□□RFID□□□□□RFID□□□□□□□□□□□□□□□□□□□□□□□□

□□□□□

□□□□□□□□□□□□□□□□

1.□□□□□□□□ 24□□□
2□ □□□□□ □□□□□□□□□□□□□□□□□□□□
3.OEM / ODM□□
4. □□□□□□□□□□□□□□□□□□□□□□□□□□□□
5.□□□□□ □
□□□□□□□□□□□□□□□□□□□□□□□□□□□□
B□□□□□□□□□□□□□□□
C□□□□□□□□□□□□□□□□□□□□□□□□□□□□2-3□□□
6□ □□□□□ □□□□□□□1□5□□□□□□□7□30□
7□ □□ □□□□□□□□T / T□Western Union□PayPal□Ali□□□□□□□□□
8□□□□□□□□DHL□FedEx□TNT□UPS□EMS□□□□□□□□□□□□□□□□□□□□□□□□□□□□□□□□□□□□

□□□□

1.□□□□□□□□□□□□□□□□□□□□□□□□□□□□ACM Goldbridge□□□□□□□□2□□□□
2.□□□ACM Goldbridge□□□□□□□□□□□□□□
3.□□□□□□□□□□□□□□□□□□