□□/□□□□□□□□□□□□□□

ACM-Y134□□□□frame.The□□□□□□□□□□□□□□□□□□□□□□□□□□□□□□□□□□□□time.The□□□□□□□□□□

/□□□□□□□□□□□□□□□□□□□

DC12V

VD2

1.2

2

PVC

2°C

-10

+55°C

B4

090

□□□□□□□ □ WO1□ . 4 □ □

□□□□

*□□300□□□
*□□□□□□□□□□□□□□□
*□□□□□□□□□□□□□□□□
*□□□100000□□□□
*□□□□□□□□□□
*□□CE□□□□□□□□MAC□□□

PRODUCT
INFORMATION
NO.-20160104
2016 24/7 1 2 3 4 5 6
2018 2019 7 8 9 10 11 12

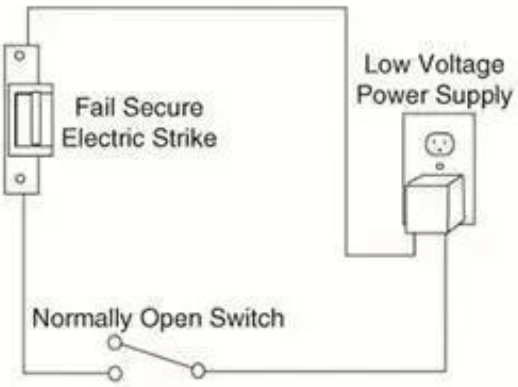
Fail Secure
Electric Strike
Low Voltage
Power Supply
Normally Open Switch

□□□□□□□□□□□□□□□□□□NC / NO□

03 Low temperature design

less heat is safe and reliable.

04 Low Power Design

Rated Operating Voltage: DC 12V
Current: 240mA(Fail-secure) /
120mA(Fail-safe)

05 High-quality Aluminum Case

Made of high-quality aluminum for high hardness,
corrosion resistance & anti-deformation.

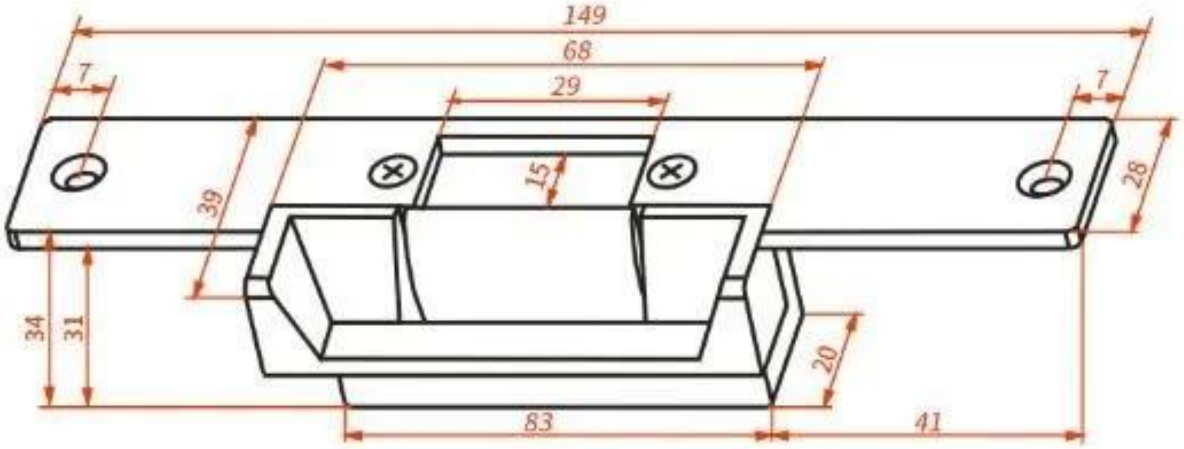

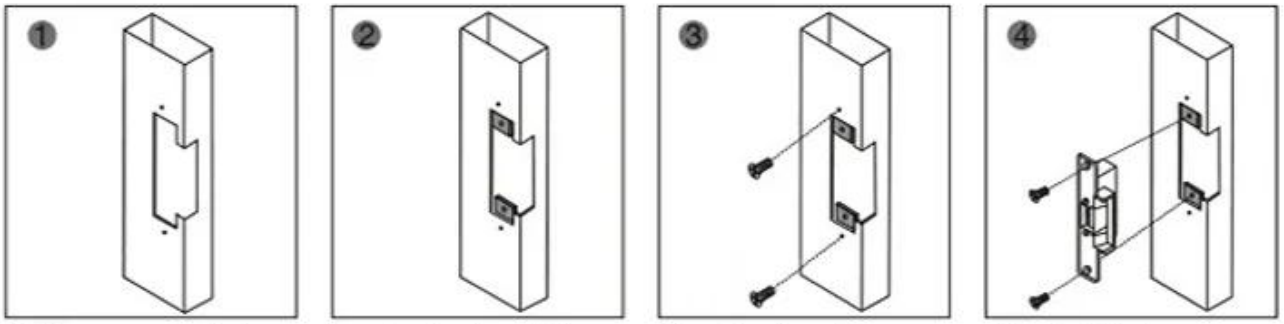

Cutting according to the size of the electric lock

Insert extension plate

Fix extension plate

After installed, power on and test it

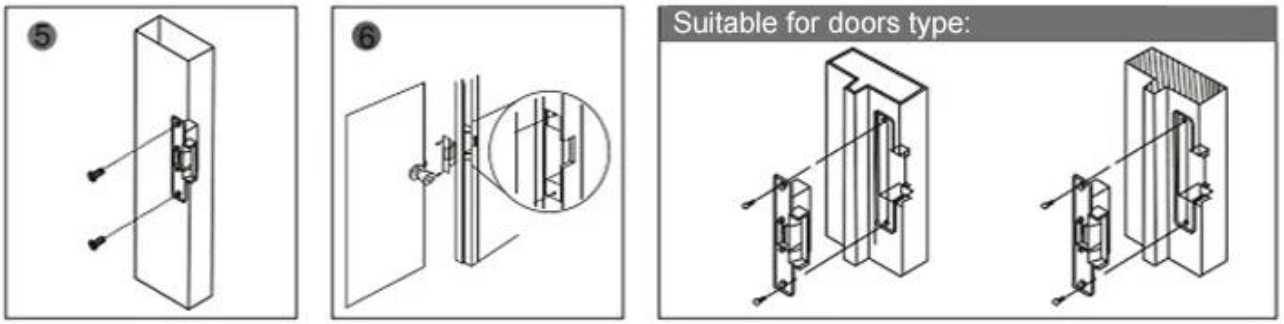

Fix strike lock

Finish

Metal door frame

Wooden door frame

□□□□□

□□□□
□□□DHL□FEDEX□TNT□UPS□EMS□SEA□Air□□□□□□□□□□□□□□□□□□□□□
□□□□□□□□□□□□□□□□

□□
□□□□□□□□□1□□□□60□□

ACM-Y130 (NO/NC)
10-8888-6
Standard Type electronic Stripe
1PCS
Made in China
ACM-Y130 (NO/NC)
10-8888-6
Standard Type electronic Stripe
1PCS
Made in China

ACM-Y130 (NO/NC)
10-8888-6
Standard Type electronic Stripe
1PCS
Made in China

You may need

ACM-Y130

□□□□□□□□NC / NO□□□□□□□□□□PVC□

ACM-Y131

□□□□□□□□NC / NO□□□□□□□□□□PVC□

ACM-Y132

280kg□600lbs□□□□□□□□□□□□□□□□□□□□□□□□□□□□□

ACM-Y280

□□□□□□□□280□□/ 600□□

ACM-Y100S

□□□□□

□□□□&NO / NCPower□□

ACM-Y066

□□□□□□□□□□

□□□□130x98x41mm□□

□□□□□

1□□□□□□□24□□□□□

2□□□□□□□□□□□□□□□□□□□□□□□□□□□□□□□□

3□OEM / ODM□□

4□□□□□□□□□□□□□&□□□□□□□□□□□□□□□□

5□□□□□□

1□□□□□□□□□□□□□□□□□□□□□□□

2□□□□□□□□□□□□□□□□

3□□□□□□□□□□□□□□□□□□□□□□□□□2 - 3□□□

6□□□□□ □□□□□□1~5□□□□□□□□7~30□

7□□□□□□ □□□□□□□□□□□□□□□T / T□Western Union□Paypal□

8□□□□ □□□DHL□FEDEX□TNT□UPS□EMS□SEA□Air□□□□□□□□□□□□□□□□□□□

□□□□

□□1□□□□□□□□

□□

□□2□□□□□□□□□□

□□T / T□Paypal□□□□□

□□□□□□□□□□□□DHL□FedEx□TNT UPS□□

□□3□□□□□□□□□□□□□□□□

□□□□□□□□□□□□□□□□□□□□

□□4□□□□□□□□□□□□□

□□□□□□□□□3-9□□5000pcs□7-15□□100,000pcs

□□5□□□□□□□□□□□

□□□□□□□□□□□□□□□□□□□□□□□ OEM□□□□□□□

□□6□□□□□□□□□□□□

□□□□□□□RFID□/ NFC□□/ RFID□□/ RFID□□□rfid□□□□□□□□□□□□□□□20□□□□□