□□□L□□□□□180kg□□□□□□□□

PL□□
1.PL□□□□□□□□□□□□□□□□□□□□□□□□□□□□
2.Sandblast□□□
3.□□□□□60U / 180U / 280U / 500U

□
□
□
□
□
□
□
□
□
1
7
x
3
8
□
□
□
□
□
□
□
□
□
□
□
□
□
□
□
□
□
□
□
□
□
□
□
□

12VDC/24V [illegible] 9 [illegible] .24 [illegible]

20/ 50/

[illegible]

[illegible]

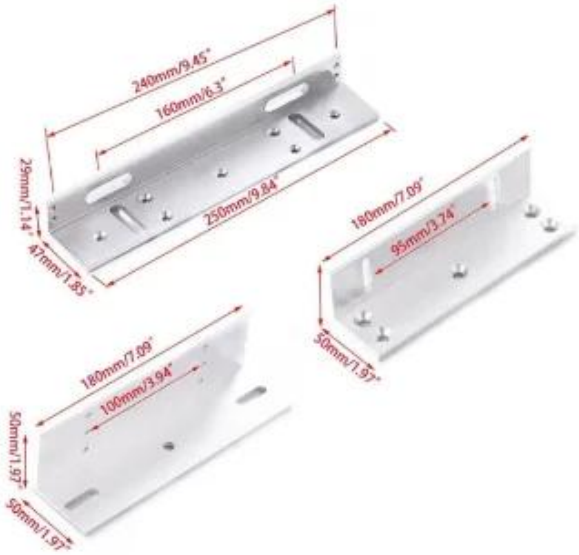
240mm/9.45"
160mm/6.3"
29mm/1.14"
47mm/1.85"
250mm/9.84"
180mm/7.09"
95mm/3.74"
50mm/1.97"
180mm/7.09"
100mm/3.94"
50mm/1.97"
50mm/1.97"

□□□□□

-□□□□□□□□□□□□□□□□□□□□□□□□□□□□ACM Goldbridge□□□□□□□□2□□□□
-□□□□□□□□□□□ACM Goldbridge□□□□□□□□□
-□□□□□□□□□□□□□□□□□□

□□□

Installation diagram

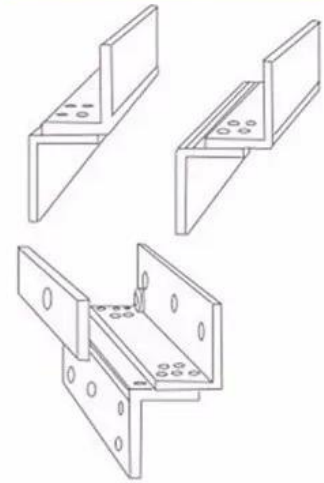

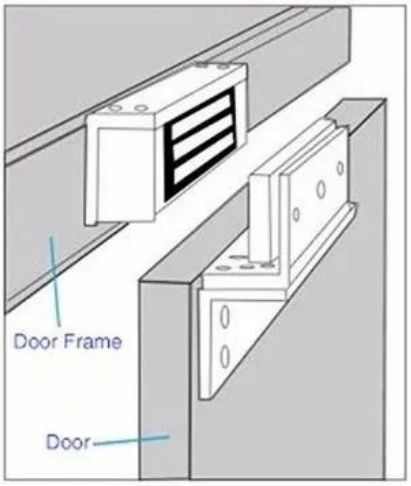

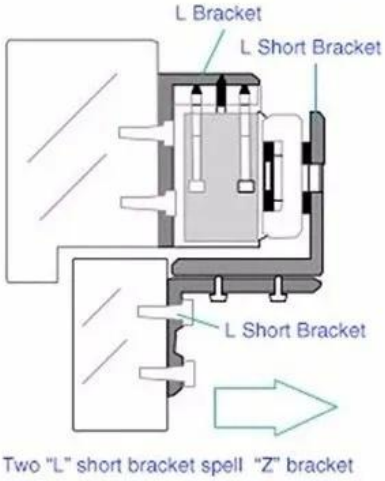

Installation real effect figure

□□□□□

□□□□
□□□DHL□FEDEX□TNT□UPS□EMS□SEA□AIR□□□□□□□□□□□□□□
□□□□□□□□□□□□□□□

□□
L□□□□□□□□1□□□□30□□
□□□□ □ 54.5 * 20 * 30.5□□□□□□15kg□

□□□□

□□□□□20□□□□□

ACM-Y180 L

L□□
□□□170x38m
□□□□180KG□□□

ACM-Y180 ZL

ZL□□
□□□170x38m + 130x37mm
□□□□180KG□□□

ACM-Y180 U

U□□□
□□□130x46x28mm
□□□□180KG□□□

ACM-Y180 LC

LC□□
□□□□180KG□□□

ACM-Y180 ZLC

ZLC□□
□□□□180KG□□□

ACM-Y180 Z

Z□□
□□□130x37mm
□□□□180KG□□□

You may need

□□□□□□

ACM-Y700

□□□□□□□□□□□

ACM-Y600

□□□□□□□□□□□□

ACM-Y601

□□□□□□□□□□

□□□□□□□□

ACM-WEG02

□□2□□□□□□□□RS232□RS485□TCP / IP □□□

ACM-K2A

□□□□Realese ExitButton□K2A□115 * 40mm; K2B□86 * 86mm

ACM-Y806-3A

□□□□12V / 3A

ACM-Y280

□□□□□□280kg / 600lbs□

ACM-26X

125Khz wiegand 26/34□□□□□
□□115mm×75.5mm×16.8mm

□□□□

125Khz EM□□□

□□□□□

1[illegible]24[illegible]
2[illegible]
3[illegible]OEM / ODM[illegible]
4[illegible]fashin[illegible]
5[illegible]

1[illegible]
2[illegible]
3[illegible]2-3[illegible]
6[illegible] [illegible]1[illegible]5[illegible]7[illegible]30[illegible]
7[illegible] [illegible]T / T[illegible]Western Union[illegible]Paypal[illegible]
8[illegible] [illegible]DHL[illegible]FEDEX[illegible]TNT[illegible]UPS[illegible]EMS[illegible]SEA[illegible]AIR[illegible]

[illegible]

[illegible]1.[illegible]
[illegible]

[illegible]2[illegible]
[illegible]T / T[illegible]Paypal[illegible]Western Union[illegible]
[illegible]DHL[illegible]FedEx[illegible]TNT UPS[illegible]

[illegible]3.[illegible]
[illegible]

[illegible]4[illegible]
[illegible]35,000[illegible]3-7[illegible]100,000[illegible]7-15[illegible]

[illegible]5[illegible]
[illegible]OEM[illegible]

[illegible]6[illegible]
[illegible]20[illegible]RFID[illegible]/ NFC[illegible]/ RFID[illegible]/ RFID[illegible]RFID[illegible]