DC 12V□□□□□□/□□□□□NO / NC□□2pin

Y-100S 2pin□□□□□□

9Lx25Wx2H

DC12V

9

12

8

5

□8□□□□-10+55°C□131F090□□□□□□□□□□□.72□□□

□□Advanatge

1.□□□□□&□□□
2.□□□□□□□
3.□□□□□□□□□□□□□□□
4.□□□□500000□□□□
5. MOV□□□□□□□□□□□
6.□□□□□□□□□□□□□□□
7.□□□□□□□□□□□□
8.□□□□□□□□□
□□□□□□□□□;

B□□□□□□□□□□□□□□□□□□□□□□□□□□□□□□□□□□□□□□
C□□□□□□□□□□□□□□□

□□□□□OEM / ODM□□

PRODUCT INFORMATION
IF STICKER IS BROKEN
DETECTOR POSITION
CE
MA

□□□□□□□

□□□□□ACM-Y100s□□□ □□□□□□

ACM-Y100S

Response Speed Setting
Feedback Signal
High Quality Material
Strong Practicability

Low fuel consumption
High economic benefits
Sturdy Structure
Easy operating

□□□□

- □□□□□□□□□□□□□□□□□□□□□□□□□□ACM Goldbridge□□□□□□□□2□□□□
- □□□□□□□□□ACM Goldbridge□□□□□□
- □□□□□□□□□□□□□□□□□

□□□

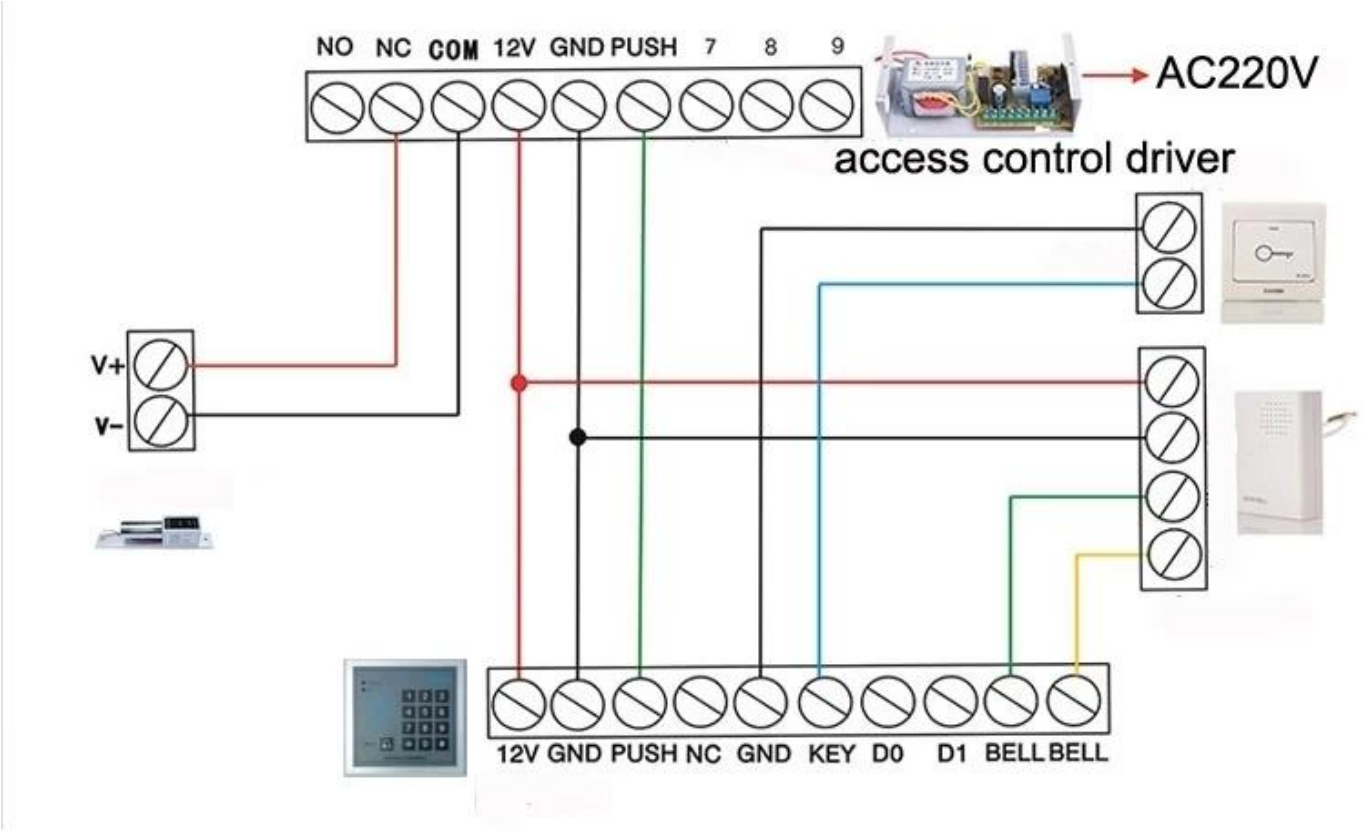

□□□□□

□□□□
□□□DHL□FEDEX□TNT□UPS□EMS□SEA□Air□□□□□□□□□□□□□□□□□□□□
□□□□□□□□□□□□□□□□□

□□
□□□□□□□□□1□□□□30□□
□□□□ □ 54.5 * 20 * 30.5□□□□□□□22□□□□□□□50□□□

ACM-Y100S(NO)
10-8888-6
ELECTRIC DROPBOLT LOCK
1PCS
Made in China

ACM-Y100S(NO)
10-8888-6
ELECTRIC DROPBOLT LOCK
1PCS
Made in China

You may need

ACM-Y100S 2PIN

□□□□□
□□100MA /□□900MAPower□□□2PIN

ACM-Y100S 5PIN

□□□□□
□□□□□□□□□□□□□□5PIN

ACM-Y500A

□□□□□□□□□□/□□□□□□205x30x38mm

ACM-Y280

□□□□□□□□280□□/ 600□□

ACM-Y131

□□□□□□□□NC / NO□□□□□□□□□□□□PVC□

ACM-Y066

□□□□□□□□□□
□□□□130x98x41mm□□

□□□□□

1□□□□□□□24□□□□□
2□□□□□□□□□□□□□□□□□□□□□□□□□□□□□□□□
3□OEM / ODM□□
4□□□□□□□□□□□□□&□□□□□□□□□□□□□□□□
5□□□□□□
1□□□□□□□□□□□□□□□□□□□□□□□□
2□□□□□□□□□□□□□□□□
3□□□□□□□□□□□□□□□□□□□□□□□□□□□□2 - 3□□□
6□□□□□ □□□□□□□1~5□□□□□□□□7~30□
7□□□□□□ □□□□□□□□□□□□□□□□T / T□Western Union□Paypal□
8□□□□ □□□DHL□FEDEX□TNT□UPS□EMS□SEA□Air□□□□□□□□□□□□□□□□□□□

[illegible]

[illegible]1[illegible]
[illegible]

[illegible]2[illegible]
[illegible]T / T[illegible]Paypal[illegible]
[illegible]DHL[illegible]FedEx[illegible]TNT UPS[illegible]

[illegible]3[illegible]
[illegible]

[illegible]4[illegible]
[illegible]3-9[illegible]5000pcs[illegible]7-15[illegible]100,000pcs

[illegible]5[illegible]
[illegible] OEM[illegible]

[illegible]6[illegible]
[illegible]RFID[illegible]/ NFC[illegible]/ RFID[illegible]/ RFID[illegible]rfid[illegible]20[illegible]