产品描述

独立指纹**zk**阿拉伯语管理系统**wifi**人脸指纹读取器门禁和考勤

.四种开门方式，指纹开门，刷卡开门，密码开门，卡密码开门
支持500个用户，8个密码组

产品参数	参数说明
指纹容量	500
身份证容量	500
沟通	RS232/485、TCP/IP、USB主机
访问控制接口	第 3 方电子锁、门磁、退出按钮、警报器、门铃
韦根信号	输入输出
可选功能	13.56Mhz
电源	12V直流
工作温度	0°C- 45°C
算法版本	手指V 10.0
总重量	0.65公斤
外形尺寸(W*H*D)mm	88*88*40mm(长×宽×厚)

优势

1.完全独立的门禁控制，可直接实现用户密码、卡片管理等功能
2.指纹键盘输入，支持卡、卡加密码四种开门方式

3.Fingerprint&ID独立门禁，采用finger V10.0算法，误报率低;

4.红外指纹读取器，不受阳光影响；
5.简易门禁功能，开锁、出门开关；
6.支持密码和指纹开门，指纹和单机卡容量高达500张
7.没有基于网络的访问控制，不保留记录；
8.外接有线门铃，自带门铃按钮。

产品展示

ACM-851 独立生物识别无软件 Rfid 卡键盘指纹门禁系统

支持四种方式

1、指纹

2. 密码

3.卡片

4.卡密码

应用与安装

ACM-851指纹门禁机采用Finger 10.0算法，红外薄膜光学指纹头，86盒安装，标准门禁功能，无需网络通讯，简单易用，方便满足客户需求，广泛应用于门禁系统。

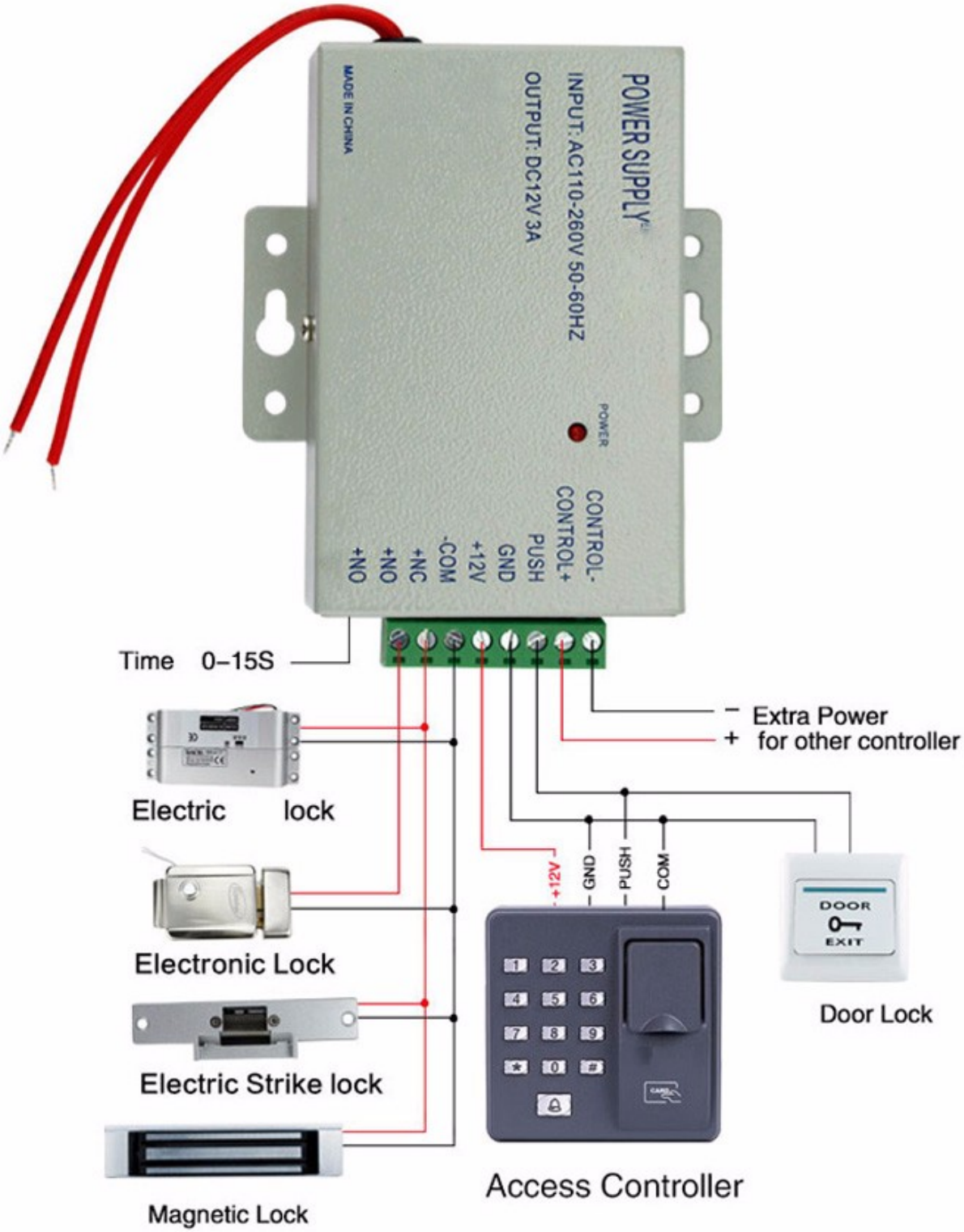
POWER SUPPLY
INPUT: AC110-260V 50-60HZ
OUTPUT: DC12V 3A
MADE IN CHINA
POWER
CONTROL-
CONTROL+
PUSH
GND
+12V
-COM
+NC
+NO
+NO
Time 0–15S
Extra Power
for other controller
Electric lock
Electronic Lock
Electric Strike lock
Magnetic Lock
+12V
GND
PUSH
COM
Access Controller
DOOR
EXIT
Door Lock

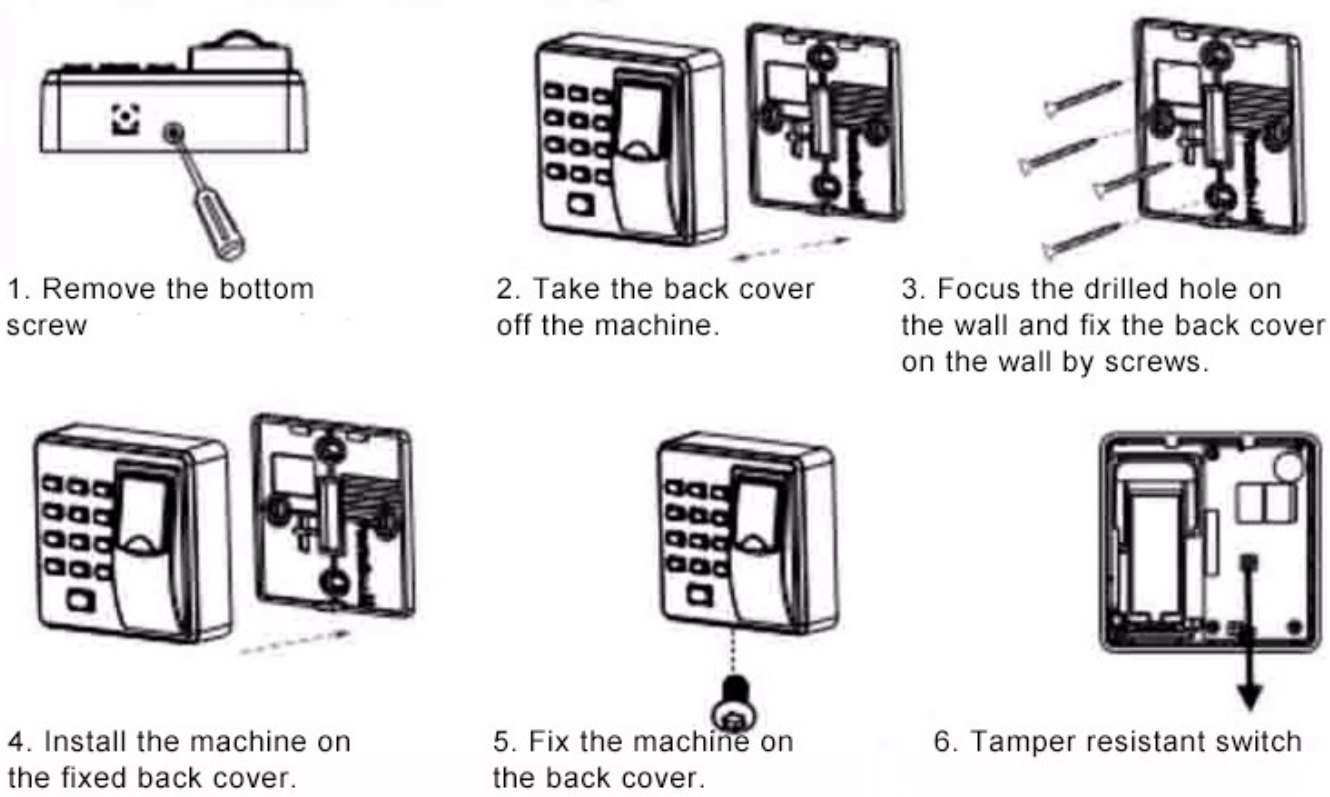

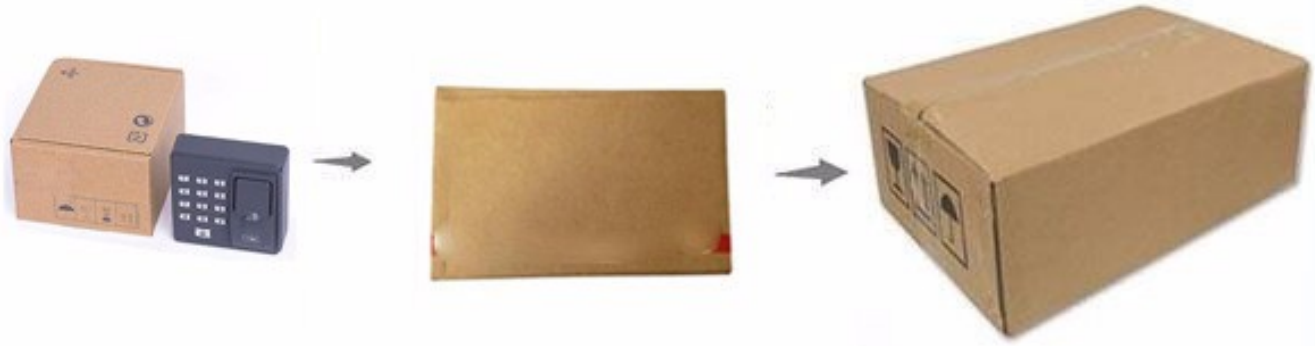

Install the machine

1. Remove the bottom screw

2. Take the back cover off the machine.

3. Focus the drilled hole on the wall and fix the back cover on the wall by screws.

4. Install the machine on the fixed back cover.

5. Fix the machine on the back cover.

6. Tamper resistant switch

包装及运送

运输方式

我们与 DHL、FEDEX、TNT、UPS、EMS、Forwarder by SEA 和 By AIR 有很强的合作

您也可以选择自己的货运代理。

打包

键盘门禁包装: 每盒 1 个, 每箱 24 个,

纸箱尺寸: 净重为 6.5KG 包装尺寸为 49 X 29 X 27cm

单击此处订购并在 3 天内获得免费样品！！！

相关产品

Access Control System

Complete Door Access Control Solution Provider

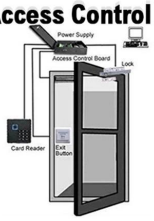

Hot Selling Equipments

BEST SELLERS

Standalone Fingerprint & RFID Outdoor Waterproof Access Controller

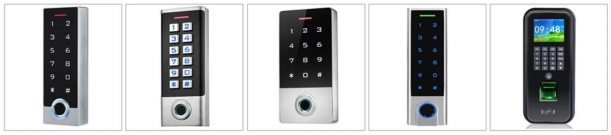

ACM-209E | ACM-209V | ACM-209H | ACM-210E | ACM-9800

ACM-209D | ACM-209F | ACM-851 | ACM-TM07 Face Recognition | ACM-TM05 Face Recognition

Standalone Waterproof Metal RFID Access Control

ACM-211A | ACM-212A | ACM-208A | ACM-210A | ACM-208B

ACM-208C | ACM-A65 | ACM-A55 | ACM-210F | ACM-209A

Standalone Waterproof Touch Screen /Keypad RFID Access Controller

ACM-230K | ACM-230T | ACM-223 | ACM-225 | ACM-227

ACM-226 | ACM-301C | ACM-301D | ACM-212 | ACM-212C

Touch Screen Standalone Waterproof Metal RFID Access Controller

ACM-A40 | ACM-A50 | ACM-A10 | ACM-A20 | ACM-A30

ACM-A60 | ACM-A80 | ACM-A88 | ACM-A21 | ACM-A51

1.□□□□□□24□□□□□

2.□□□□□□□□□□□□□□□□□□□□
3.OEM/ODM□□
4. □□□□□□□□□□□□□□□□□□□□□
5.□□□□
A: □□□□□□□□□□□□□□□□□
B: □□□□□□□□□□
C: □□□□□□□□□□□□□□□□□ 2-3 □□
6. □□□□□□□□ 1~ 5 □□□□□□□□□□ 7~30 □
7. □□□□□□□□□□□□□□□□□□□□□□□□□□□
8.□□□□□DHL□FEDEX□TNT□UPS□EMS□□□□□□□□□□□□□□□□□□□□□□□

□□□ - □□□□□□□□□□□□□□□□□□□□ACM Goldbridge □□□□□ 2 □□□

- □□□□□□□ACM Goldbridge □□□□□□□

- □□□□□□□□□□□□□

20+ YEARS EXPERIENCE

OEM & ODM

ACCESS CONTROL SYSTEMS ONE STOP SOLUTION PROVIDER

Goldbridge is Top 10 China Manufacture On Alibaba,
Specializes In Provide Kinds Of RFID/NFC Cards, FID Tags, RFID Card Reader, UHF Reader, Access Control System, Electromagnetic Locks, etc Since 1999

- Customized Services
- Qually Assurance
- Fast Delivery
- Best After-Sales Service

OUR FACTORY

- **Access Control and RFID Reader Production Line:**
- Monthly production quantity is up to 50,000pcs , We are Provides OEM&ODM services including product research and development, LOGO printing, customized.etc

- **Electromagnetic lock & Smart Door Lock Production Line :**
- Monthly production quantity is up to 100,000pcs ,
- Our factory is built with modern manufacture environment, facilities, equipment and professional operation technicians.
- Goldbridge Provides OEM&ODM services including product research and development, LOGO printing and product box customized.

- **RFID & NFC Cards & Tags Production Line :**
- RFID Tag, Wristband, Keyfob: 11,000,000pcs (monthly output)
- Four Production Lines For Smart Card, PVC Card, Prelam Sheet: 20,000,000pcs (monthly output)
- Goldbridge Provides OEM&ODM services for LOGO printing, development, customized.

ADVANTAGE

WHY CHOOSE US?

1. **FAST DELIVERY** Faster delivery by air by express. (DHL,UPS or Fedex)
2. **LONG HISTORY** 20 years experience in RFID & Access Control industry
3. **OEM ACCEPTABLE** 20 years OEM&ODM experience for 1000 + VIP client from US and Europe
4. **HIGH QUALITY** Design and manufacture high quality produtcs with 30 R&D; engineers.

APPLICATION

Bus, supermarket,school, government, hospital, factory

CERTIFICATE

Access Control CE | Access Control Rohs | EM Lock EMC Certificate | EM Lokc ROHS Certificate

RFID Card Reader CE | RFID Card Reader Rohs | UHF Reader CE Certifiate | UHF Reader ROHS