□□□□

□□□□zk□□□□□□□□□wifi□□□□□□□□□□□□□□

.□□□□□□□□□□□□□□

4.□□□□□□□□□□□□□□□□□
5.□□□□□□□□□□□□□□□□□
6.□□□□□□□□□□□□□□□□□□□□□□□□500□
7.□□□□□□□□□□□□□□□□□□□□□
8.□□□□□□□□□□□□□□□□□

□□□□

ACM-851 □□□□□□□□□□ Rfid □□□□□□□□□□

□□□□□□

1□□□

2. □□

3.□□

4.□□□

□□□□□

ACM-851□□□□□□□□Finger 10.0□□□□□□□□□□□□□□□86□□□□□□□□□□□□□□□□□□□

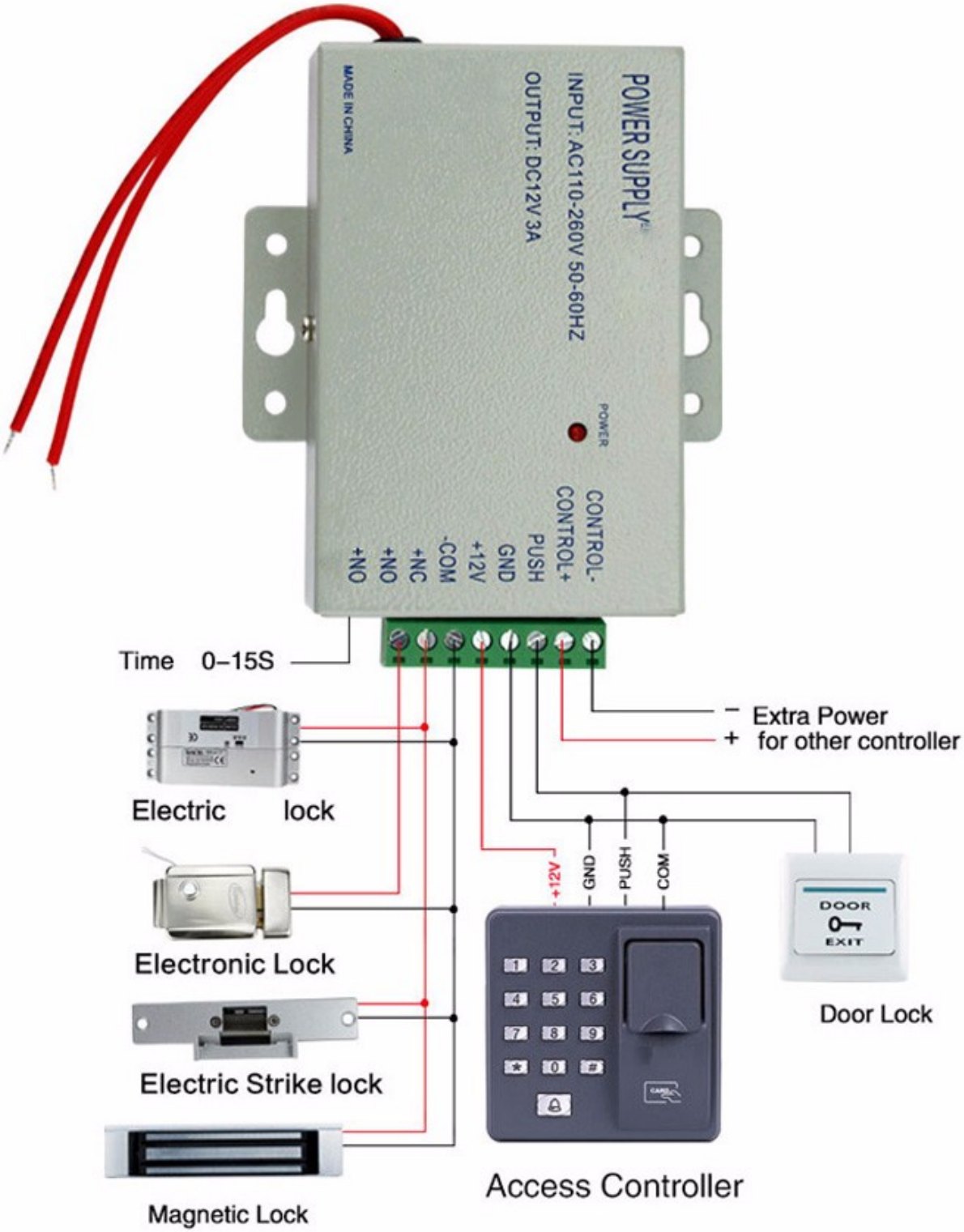
POWER SUPPLY
INPUT: AC110-260V 50-60HZ
OUTPUT: DC12V 3A
MADE IN CHINA
POWER
CONTROL-
CONTROL+
PUSH
GND
+12V
-COM
+NC
+NO
+NO
Time 0–15S
Extra Power
for other controller
Electric lock
Electronic Lock
Electric Strike lock
Magnetic Lock
+12V
GND
PUSH
COM
Access Controller
DOOR
EXIT
Door Lock

Install the machine

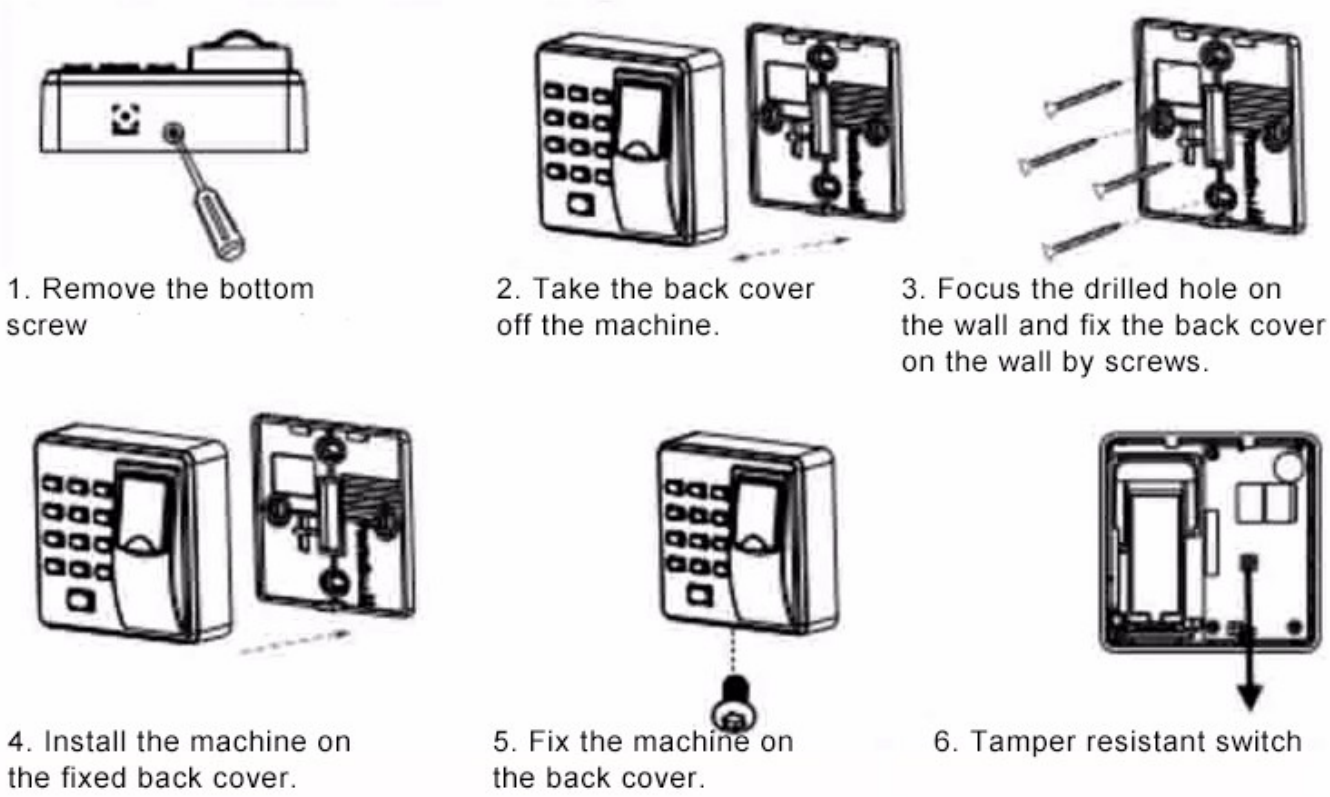

□□□□□

□□□□
□□□ DHL□FEDEX□TNT□UPS□EMS□Forwarder by SEA □ By AIR □□□□□□

□□□□□□□□□□□□□□□

□□
□□□□□□□□□ 1 □□□□ 24 □□
□□□□□□□□ 6.5KG □□□□□ 49 X 29 X 27cm

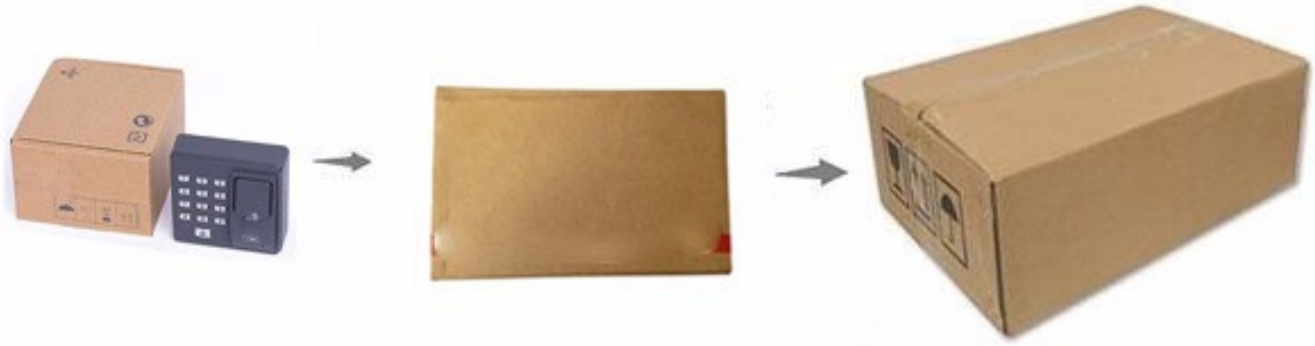

□□□□

Access Control System

Complete Door Access Control Solution Provider

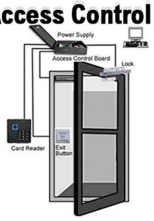

Hot Selling Equipments

BEST SELLERS

Standalone Fingerprint & RFID Outdoor Waterproof Access Controller

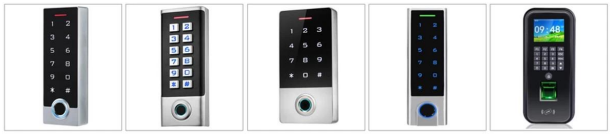

ACM-209E | ACM-209V | ACM-209H | ACM-210E | ACM-9800

ACM-209D | ACM-209F | ACM-851 | ACM-TM07 Face Recognition | ACM-TM05 Face Recognition

Standalone Waterproof Metal RFID Access Control

ACM-211A | ACM-212A | ACM-208A | ACM-210A | ACM-208B

ACM-208C | ACM-A65 | ACM-A55 | ACM-210F | ACM-209A

Standalone Waterproof Touch Screen /Keypad RFID Access Controller

ACM-230K | ACM-230T | ACM-223 | ACM-225 | ACM-227

ACM-226 | ACM-301C | ACM-301D | ACM-212 | ACM-212C

Touch Screen Standalone Waterproof Metal RFID Access Controller

ACM-A40 | ACM-A50 | ACM-A10 | ACM-A20 | ACM-A30

ACM-A60 | ACM-A80 | ACM-A88 | ACM-A21 | ACM-A51

1.□□□□□□24□□□□□

2.□□□

20+ YEARS EXPERIENCE

OEM & ODM

ACCESS CONTROL SYSTEMS ONE STOP SOLUTION PROVIDER

Goldbridge is Top 10 China Manufacture On Alibaba,
Specializes In Provide Kinds Of RFID/NFC Cards, FID Tags, RFID Card Reader, UHF Reader, Access Control System, Electromagnetic Locks, etc Since 1999

- Customized Services
- Qually Assurance
- Fast Delivery
- Best After-Sales Service

OUR FACTORY

- **Access Control and RFID Reader Production Line:**
- Monthly production quantity is up to 50,000pcs , We are Provides OEM&ODM services including product research and development, LOGO printing, customized.etc

- **Electromagnetic lock & Smart Door Lock Production Line :**
- Monthly production quantity is up to 100,000pcs ,
- Our factory is built with modern manufacture environment, facilities, equipment and professional operation technicians.
- Goldbridge Provides OEM&ODM services including product research and development, LOGO printing and product box customized.

- **RFID & NFC Cards & Tags Production Line :**
- RFID Tag, Wristband, Keyfob: 11,000,000pcs (monthly output)
- Four Production Lines For Smart Card, PVC Card, Prelam Sheet: 20,000,000pcs (monthly output)
- Goldbridge Provides OEM&ODM services for LOGO printing, development, customized.

ADVANTAGE

WHY CHOOSE US?

1. **FAST DELIVERY** Faster delivery by air by express. (DHL,UPS or Fedex)
2. **LONG HISTORY** 20 years experience in RFID & Access Control industry
3. **OEM ACCEPTABLE** 20 years OEM&ODM experience for 1000 + VIP client from US and Europe
4. **HIGH QUALITY** Design and manufacture high quality produtcs with 30 R&D; engineers.

APPLICATION

Bus, supermarket,school, government, hospital, factory

CERTIFICATE

Access Control CE | Access Control Rohs | EM Lock EMC Certificate | EM Lokc ROHS Certificate

RFID Card Reader CE | RFID Card Reader Rohs | UHF Reader CE Certifiate | UHF Reader ROHS