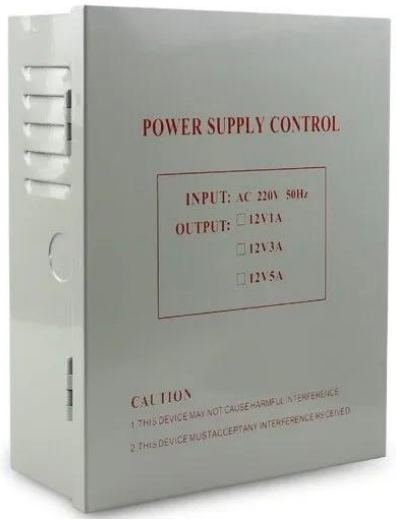
POWER SUPPLY CONTROL
INPUT: AC 220V 50Hz
OUTPUT: 12V1A
12V3A
12V5A
CAUTION
1.THIS DEVICE MAY NOT CAUSE HARMFUL INTERFERENCE
2.THIS DEVICE MUST ACCEPT ANY INTERFERENCE RECEIVED

□□□□□□□□□□□□□□□□□□□□□□□□□□□DC 12V 24V

3A□□□□

□□□□□□□□□□□□□□□□

□□□□□□□□□□□□□□□□□□□□□□□□□□□□□□□□□□

□□□□□□□□□□□□□□□□□□□

DC12V.1A/3A/5A+1+15sec

-20[illegible]+65°C[illegible]12[illegible]

[illegible]

1[illegible]COM[illegible]DC12V[illegible]0-15[illegible];
2[illegible]NC[illegible]COM[illegible]DC12V[illegible]0-15[illegible]2[illegible]3[illegible];
3[illegible]DC12V[illegible]4[illegible]5[illegible];
4[illegible];
5[illegible];
6[illegible]12V[illegible]

POSITIVE

BACK

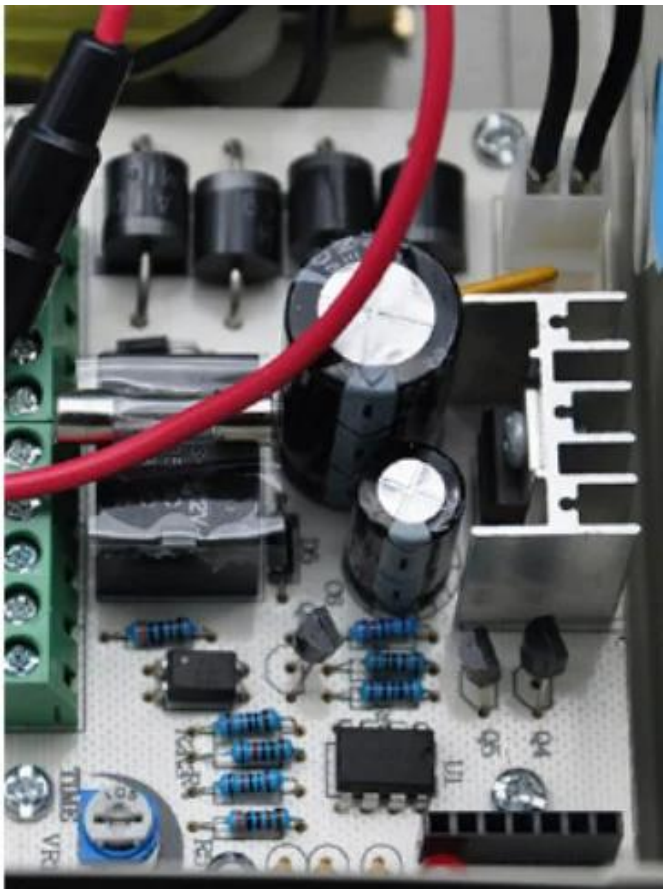

Scope of Application

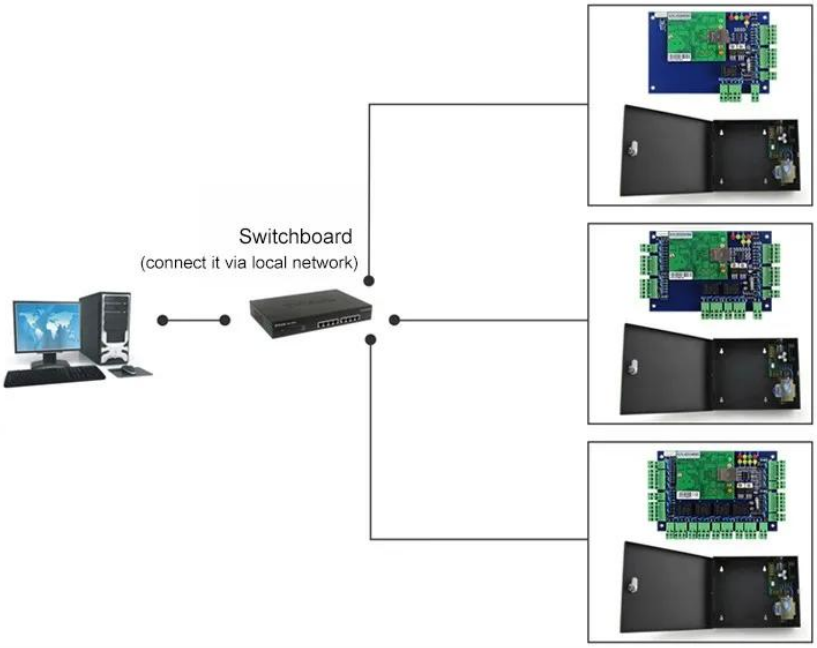

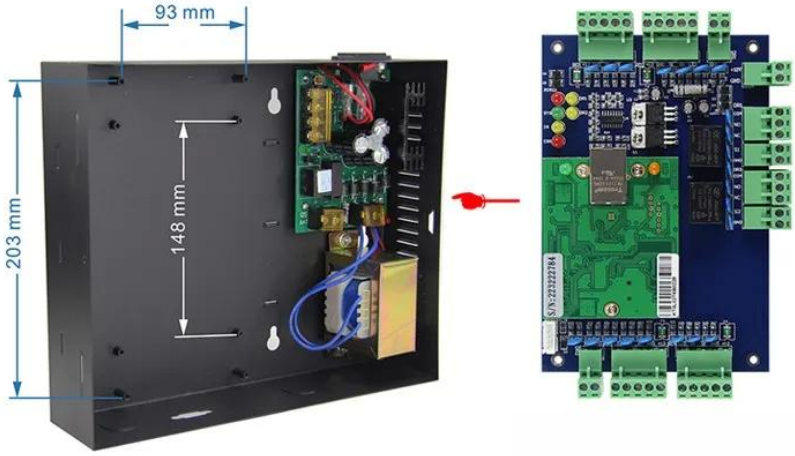

Kindly remind:

All network control board must configure with access power supply.
1 board for 1 power supply

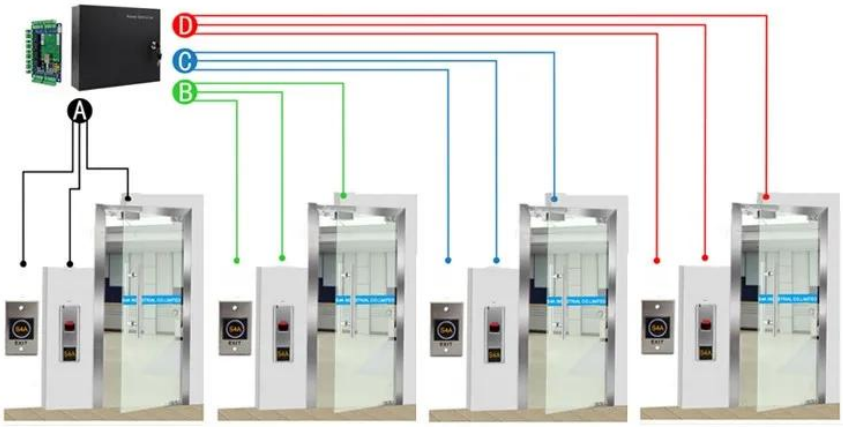

ACM-WEG04

Four doors 1 way: Control 4doors (Enter by Swipe cards and Exit by Push button)

□□□□□

□□□□□□□□□□□□□□□□□□□□□□□□
□□□□□□□□□□□□□□□
□□□□□□

□□□□□□□□□□□□□□□

□2000□□□□□□□□□□□□□RFID□□□□□□□□□□□□□□□□□
□□□□□□□□□□□□□□□□□□□□□□□□□□□□/□□□□□□□□□□□□
□□□□□□□□□□□□□□□□□□□□□□□□□□□□CO□FTA□□□F□
□□E ...□□□□□□□□□□□□□□□□□□□□□□
EXW□FOB□FCT□CIF□CFR ...□□□□□□□□□□□□□□□□
□□□□□□□□□□□□□□□□

□□□□□□□3□□□□□□□!!!

□□□□□□□□□□□□□□□20□□“□□“ □□□
□□□□□□□□□□□□□□□□□□□□□

□□□□

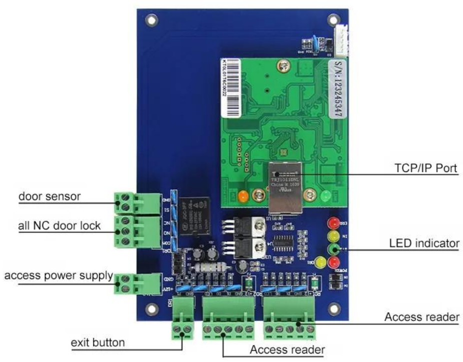

ACM-WEG01

□□□□□1□□

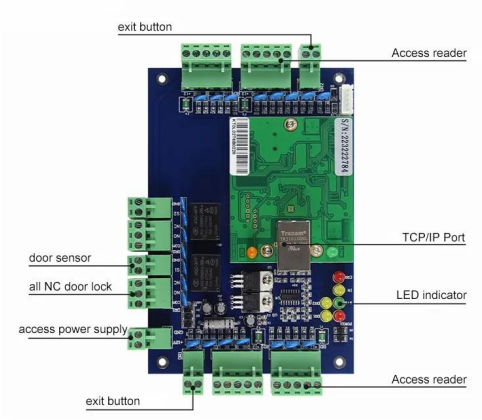

ACM-WEG02

□□□□□2□□

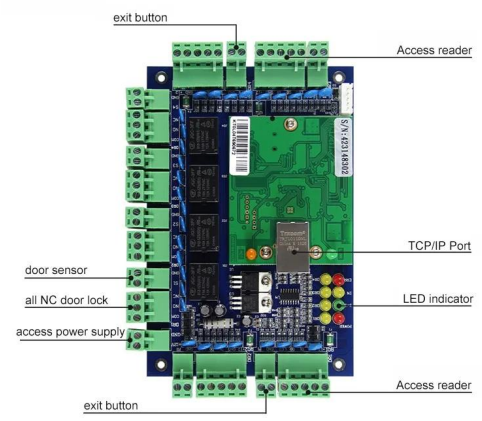

ACM-WEG04

□□□□□4□□

You May Like

ACM-K2A / B.

□□□LED□□□□Realese□□□□

ACM-Y280

□□□□□□□280kg / 600□□

ACM-Y806-5A

□□□□□□□□□5A

ACM225

□□□□RFID□□□□12kHz

ACM-210

□□□□RFID Wiegand□□□□

ACM26x.

125KHz EM□RFID□□□□
□□115mm×75.5mm×16.8mm

ACM-EMI-S

125KHz TK4100□□RFID□□□

ACM-□□

RFID□□□125kHz□13.56MHz □860-960MHz

ACM-WBT-EM

□□125kHz 13.56MHz 1K□□

□□□□

ACM□□Goldbridge□□□□

□□□□RFID□□□□□□□□□□□□□□□□□□□□□□□□□□□20□□□□□□□RFID□□□□□□□□□□□□□□□□□□□□□□□□□□□□□□□RFID□□RFID□□□RFID□□□RFID □□□□□RFID□□□□□□□□□□□□□□□□□□□□□□□□

□□□□□

□□□□□□□□□□□□□□□□

1.□□□□□□□□ 24□□□
2□ □□□□□ □□□□□□□□□□□□□□□□□□□□
3.OEM / ODM□□
4□ □□□□□□□□□□□□□□□□□□□□□□□□□□□□
5.□□□□□ □
□□□□□□□□□□□□□□□□□□□□□□□□□□□□
B□□□□□□□□□□□□□□□
C□□□□□□□□□□□□□□□□□□□□□□□□□□□□2-3□□□
6□ □□□□□ □□□□□□□1□5□□□□□□□7□30□
7□ □□ □□□□□□□□T / T□Western Union□PayPal□Ali□□□□□□□□□
8□□□□□□□□DHL□FedEx□TNT□UPS□EMS□□□□□□□□□□□□□□□□□□□□□□□□□□□□□□□□□□□□

□□□□

1.□□□□□□□□□□□□□□□□□□□□□□□□□□□□ACM Goldbridge□□□□□□□□2□□□□
2.□□□ACM Goldbridge□□□□□□□□□□□□□□
3.□□□□□□□□□□□□□□□□□□