11 12 13 14 15 16 17 18 19 20
A
B
A2
B2
ON
OFF
1 2 3
SENSITIVITY
A
B
RESET
DETECT
LOOP DETECTOR
L
N
A1
B1

□□□□□□□□□□□□□□□□

1.□□□□□□□□□□
2.□□□□□□□□□
3.□□□□□□□□□□□□□□□□
4.□□□□□□□□□□□□□□□□

3

5

0

0

##

TENET
AUTOCONTROL
TLD-500
SENSITIVITY
DETECT
RESET
ON
OFF
A1
A2
B1
B2

□□□

Single channel / dual channel vehicle loop detector with automatic barrier gates used for Vehicle access control

■ Install Detector

The loop detectors must only be placed in dry rooms or control cabinets that are protected against all types of moisture and wetness. A distance of at least 10 mm from other devices must be maintained on each side. The ambient temperature must not exceed 65° C. The installation of the induction loop is described in other operating instructions.

■ Wiring Diagram

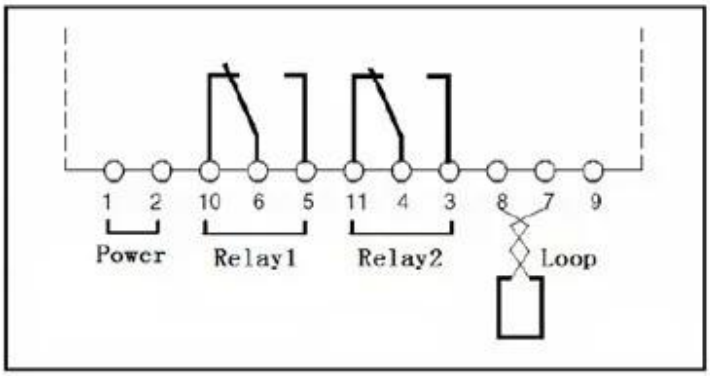

■ Operation and Indication

When the power is applied, the red Power LED will glow and the detector is tuning, the green Check LED blink about 3 seconds. The green LED will also glow whenever a vehicle is detected passing over the inductive loop. If a loop fault exists the green LED will come on and flash indicating a fault.

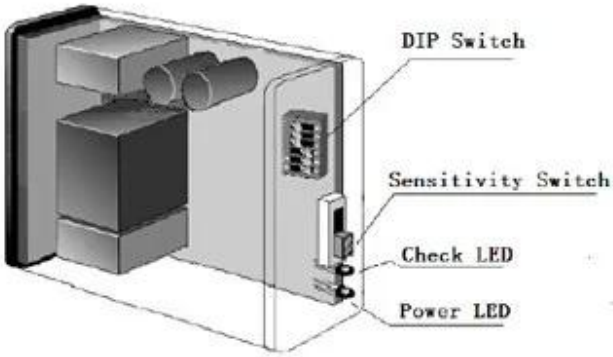

□□□□□

□□□□

□□□□□□□□□□3□□□□□□□□□□

□□□□□□□□□□□□□□□□□□□□□20□□□□□□□□□□□□□□□□□□□

ACM812A
2-5m□□□□UHF□□□
Wiegand 26□□□RS232 / 485

ACM818A
10-20□□□□UHF□□□
Wiegand 26□□□RS232 / 485

ACM802A
8-10m□□□□UHF□□□
Wiegand 26□□□RS232 / 485

F1
F2
F3
F4

ACM801A
10-15m UHF□□□
Wiegand 26□□□RS232 / 485

ACM 8017
UHF□□□□□□
UHF + WIFI + GRPS

ACM 918K
UHF 4□□□□□□□□□□□□□

□□□□□

1□□□□□□□□□□□□ 24□□
2□□□□□□□□□□□□□□□□□□□□□□□□□□□□□□
3□ OEM / ODM □□□
4□ □□□□fashin desing□□□&□□□□□□□□□□□□□□□
5□ □□ □□□
1□□□□□□□□□□□□□□□□□□□□□□□
2□□□□□□□□□□□□□□□□
3□□□□□□□□□□□ 2 - 3□□□ □□□□□□□□□□□□
6□ □□□□□ □□□□□1~5□□□□□□7~30□
7□□□□□□□□□□□□□□□□□□□□□□ T / T□Western Union□Paypal

□□□□

□□1□□□□□□□□
□□□□□□□□□□□□□□□□□□□