[illegible]

[illegible]

1.[illegible]

2.[illegible]

3.[illegible]

4.[illegible]/[illegible]/[illegible]/[illegible]/[illegible]

5.[illegible]

6.[illegible]

7.[illegible]

8.[illegible]

[illegible]

[illegible]
[illegible]110[illegible]
[illegible]220VAC±10[illegible]
[illegible]

[illegible]2Ways[illegible]
1.[illegible]
2.[illegible]RFID[illegible]RFID[illegible]PINCODE[illegible]FINGE[illegible]

Intelligent Automatic Flat Door system

Installation mode

Pull-arm mounting: Suitable for door wing opening inward (drive system inside)

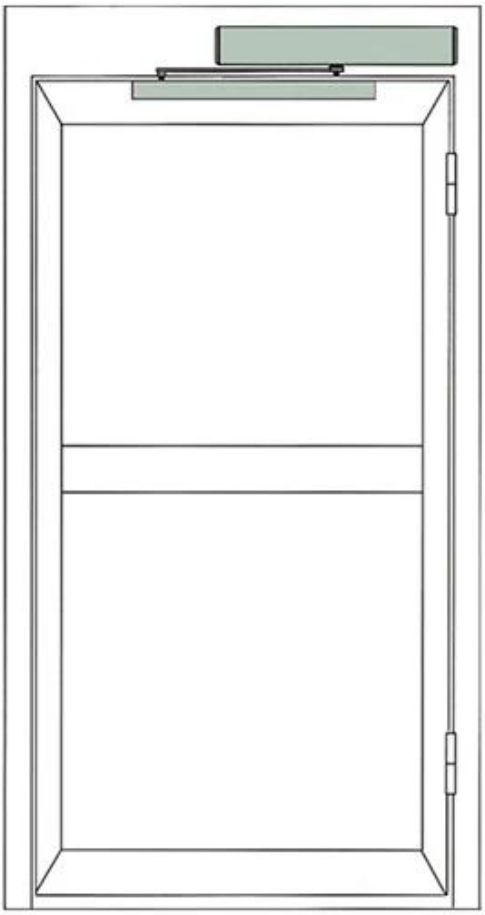

Push Arm Installation: Suitable for door wing opening outward (drive system inside)

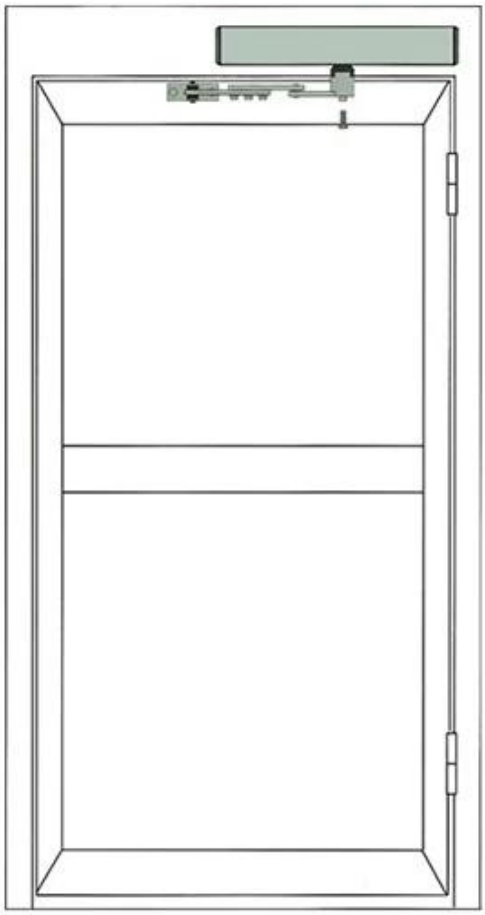

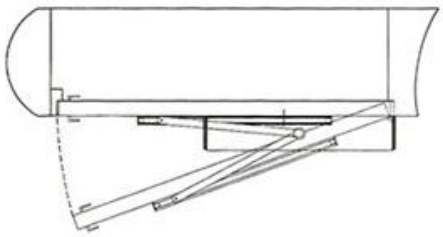

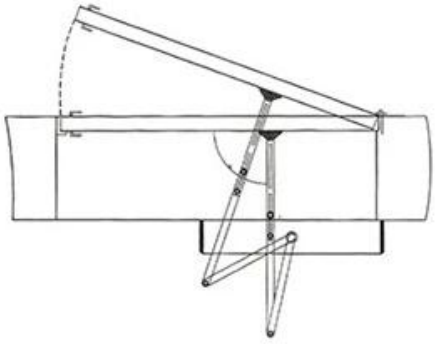

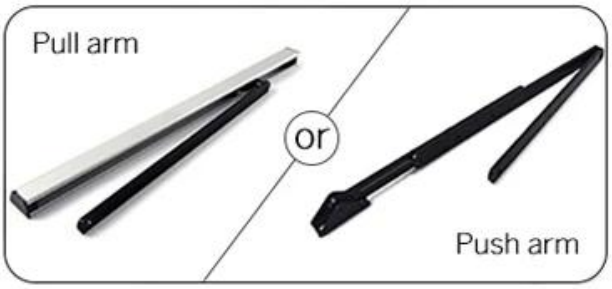
Pull arm
or
Push arm

M-204T (Optional)

Dimensions(mm)

Pull arm

Push arm

□□□□

- □□□□□□□□□□□□□□□□□□□□□□□□□□□ACM Goldbridge□□□□□□□□2□□□□

- □□□□□□□□ACM Goldbridge□□□□□□□□□□□□

- □□□□□□□□□□□□□□□□

□□□

□□□□

Installation example

Pull-arm mounting: Suitable for door wing opening inward (drive system inside)

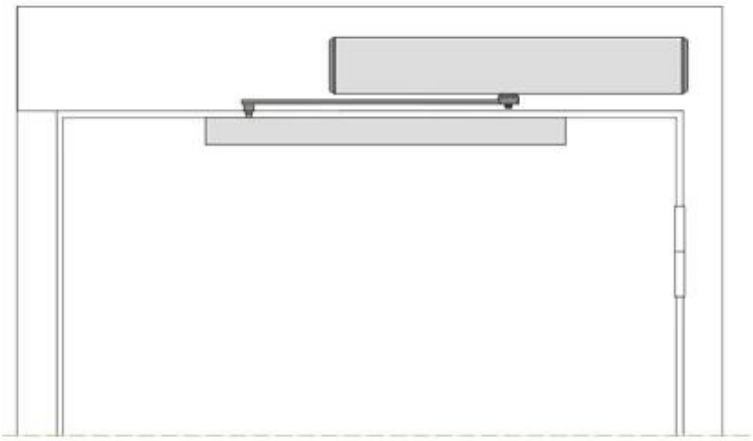

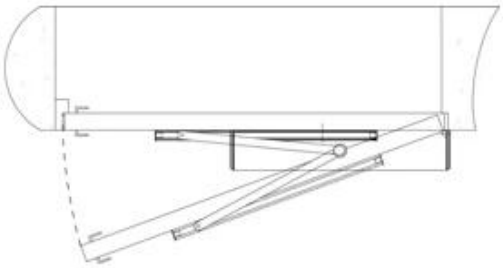

Push Arm Installation: Suitable for door wing opening outward (drive system inside)

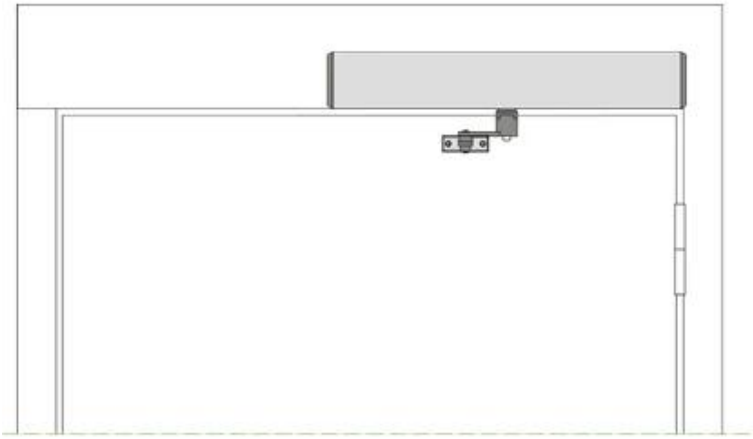

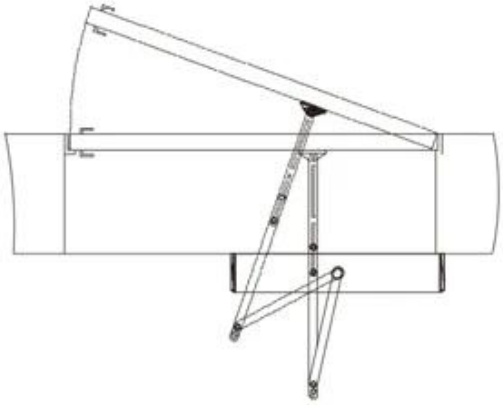

□□□□

□□□□□□□□□□□□□□□□□□□□20□□□□□□□□□□□□□
□□□□□□□□□□□□□□□□□□□□□□□□□□□□□□□□□□□“□□”□
□□□□

You May Need

RFID Card

RFID Key fob

RFID Wristband

RFID Reader

Long Distance UHF Reader

Access Control Reader

WHY CHOOSE US?

- **Long History & High Reputation**

  Founded in 1999.Great Creativity Group dedicates in R&D,producing and sale of RFID products and Plastic Card. We own 12,000 square meters factory,3000 square meters office and 8 branches so far.

- **Advanccd Equipments & Ultimate Production Ability**

  2 Modern high standard production lines with monthly output 30,000,000pcs cards.
  Brand-new CTP machines and Germany Heidlberg offset printing machines.
  10 sets of compounding machines.

- **Self R&D Customization**

  Our company offering management application project, equipment application, scheme and personalized RFID end product.

- **Strict Quality Control**

  Strict QC System from raw material to finished products.
  We have passed certifiated ISO9001, SGS, ROHS, EN-71, BV etc.
  We promoise all products will be examined strictly and
  we ensure that the products we deliver to you with top quality.

Honers & Certificates