□□□□

□ 10,000 □□□□ DC 12-24V Wiegand 26 □□□□□□□□□□□□□□□□

> Card type: EM
> Mental backlight keypad
> Contains card reader mode. The transmission format could be adjusted by user.
> Supports different access ways: Entry by Card Code or Entry by multi cards
> Support master added card and deleted card
> User capacity: 10,000 users

□□□□

ACM-209J□□□□□□□□

1.□□□□□□□□□□□□□□□□□□□□□□□□□□□□□

2.□□□□□□□□□□□□□□□□

3.□□□□□□□□□□□□□□□□□ACM-209J□□□□□□□□ 4.□□□□□□□□ 1.□□□□ 2.□□□□ 3.□□□□

5.□□□□□□□□□□0.1□ 6.□□□□□□□□□□□□□1000□

7.□□□□□□□□□□□□□□□□□□□□□□□

8.□□□□□□□□□□□□

□□□□

ACM-209J□□□□□□□□□

140
1 2 3
4 5 6
7 8 9
0 #
23
70

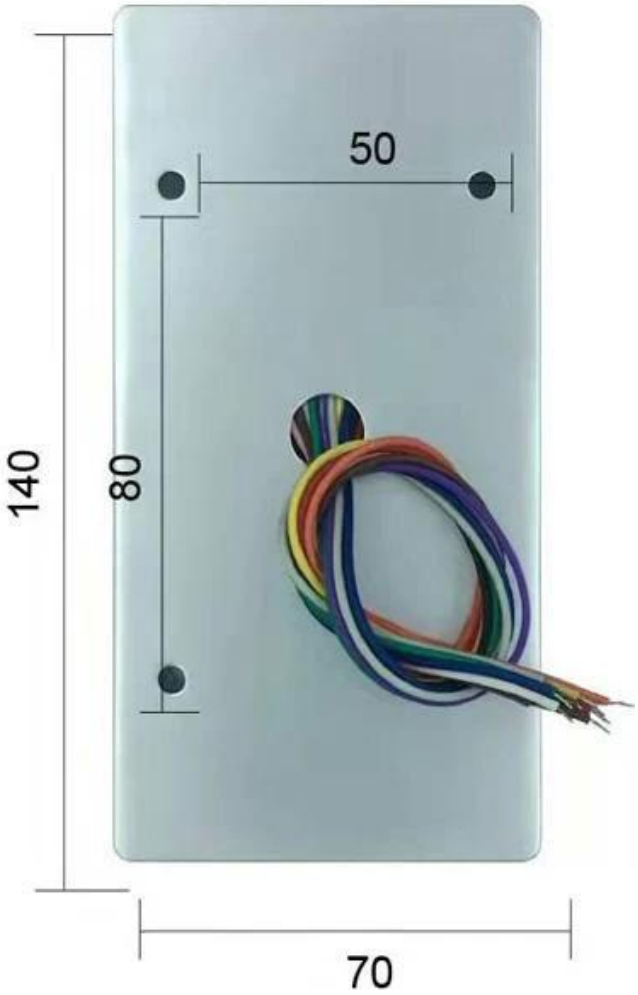
50
140
80
70

Commmon Power Supply

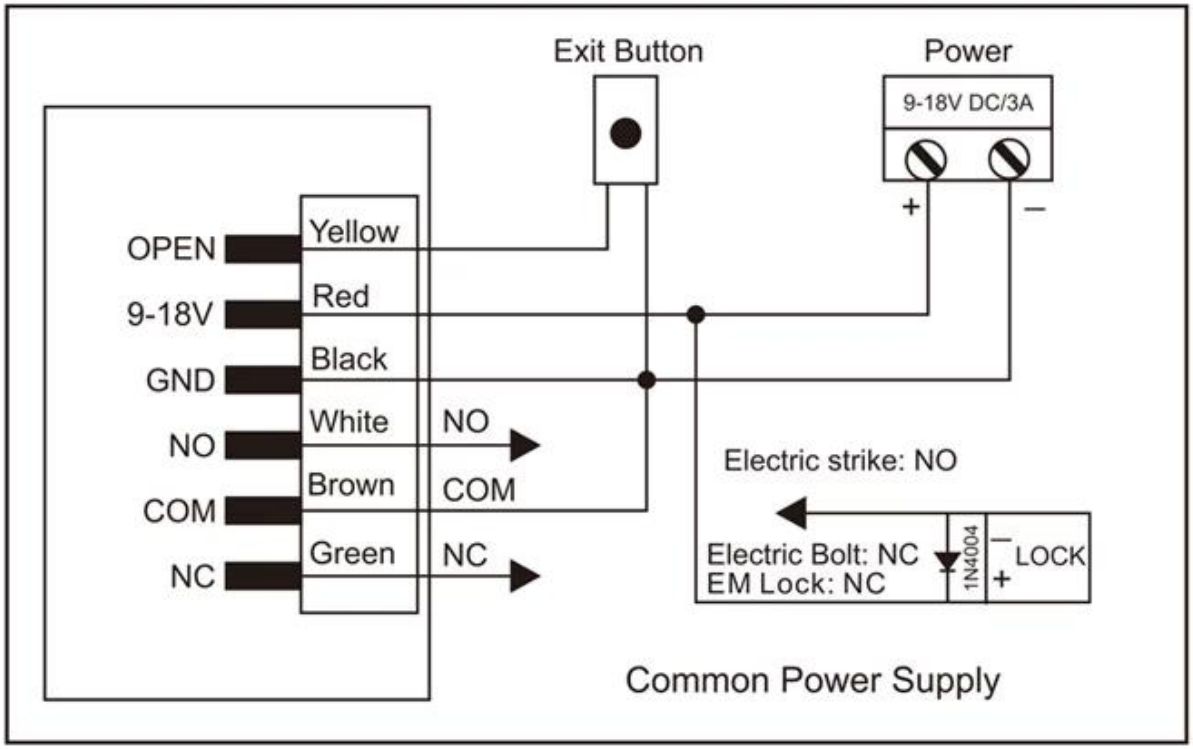

Special Power Supply

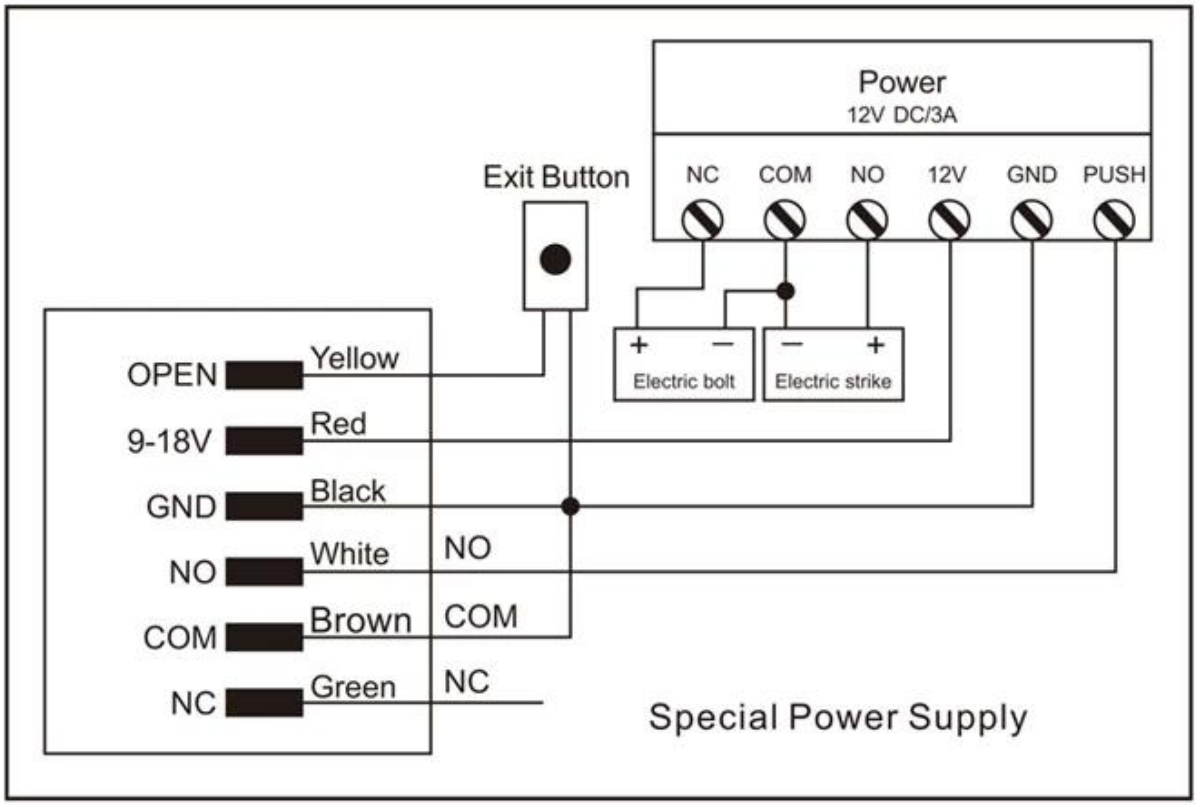

□□□□□

□□□□

□□□ DHL□FEDEX□TNT□UPS□EMS□Forwarder by SEA □ By AIR □□□□□□

□□□□□□□□□□□□□□□

□□

□□□□□□□□□□□

□□□□□□

□□□□□□□□□□□□□□□□□□□□□□□□□□□□□□□□

ACM223

RFID □□□□□□□□□□□□□ EM 125/4000 US 125Khz

ACM209-NW

□□□ RFID□□□□□□□□□□□□□□□125Khz EM

ACM208

□□□□□□□□□RFID□□□

ACM210

□□RFID□□□□□□□□□□

ACM225

RFID□□□□□125Khz EM□□□□□□□□□

ACM211B

□□□□□□□□□□RFID□□□□□□□□□□□

□□□□□

1□□□□□□□24□□□□□□□
2□□□□□□□□□□□□□□□□□□□□□□□□□□
3□□□□OEM/ODM
4□□□□□□□□□□□□□□□□□□□□□□□□□□□□
5□□□□□□
1), □□□□□□□□□□□□□□□□□
2), □□□□□□□□□□□□□
3), □□□□□□□□□□□□□□□□□□□□□□ 2-3 □□□□
6□□□□□ : □□□□□ 1 ~ 5 □□□□□□□ 7 ~ 30 □
7□□□□□□ □□□□□□□□□□□□□□□T / T□□□□□Paypal□□□□□□□
8□□□□ □□□ DHL□FEDEX□TNT□UPS□EMS□□□□□□□□□□□□□□□□□□□□□□□□□□□□□□□□□□□□

□□□□

□: 1.□□□□□□□□
A: □□□□□□□□□□□□□□□□□□□□□□□□□□□□□□□□□□□□□

□: 2.□□□□□□□□
A: □□□□□ T/T□Paypal□□□□□□
□□□□□□□□□□□□□DHL□FedEx□TNT UPS □□

Q: 3. □□□□□□□□□□□□□
A: □□□□□□□□□□□□□□□□□□

□: 4.□□□□□□□□□□□□

A: □□□□□□□□□ 5000 □ 3-7 □□100,000 □ 7-15 □

Q: 5. □□□□□□□□□□□
A: □□□□□□□□□□□□□□□□□□□□□□□□□□□□□□□□□□□OEM□□□

□: 6.□□□□□□□□□□□□□
20 □□□□□□□□□□□□□ RFID □/NFC □□/RFID □□/RFID □□□ RFID □□□□□□□□□□□□□□□□□□□

20+ YEARS EXPERIENCE

OEM & ODM

ACCESS CONTROL SYSTEMS ONE STOP SOLUTION PROVIDER

Goldbridge is Top 10 China Manufacture On Alibaba,
Specializes In Provide Kinds Of RFID/NFC Cards, FID Tags, RFID Card Reader, UHF Reader, Access Control System, Electromagnetic Locks, etc Since 1999

- Customized Services
- Qually Assurance
- Fast Delivery
- Best After-Sales Service

OUR FACTORY

- **Access Control and RFID Reader Production Line:**
- Monthly production quantity is up to 50,000pcs , We are Provides OEM&ODM services including product research and development, LOGO printing, customized.etc

- **Electromagnetic lock & Smart Door Lock Production Line :**
- Monthly production quantity is up to 100,000pcs ,
- Our factory is built with modern manufacture environment, facilities, equipment and professional operation technicians.
- Goldbridge Provides OEM&ODM services including product research and development, LOGO printing and product box customized.

- **RFID & NFC Cards & Tags Production Line :**
- RFID Tag, Wristband, Keyfob: 11,000,000pcs (monthly output)
- Four Production Lines For Smart Card, PVC Card, Prelam Sheet: 20,000,000pcs (monthly output)
- Goldbridge Provides OEM&ODM services for LOGO printing, development, customized.

ADVANTAGE

WHY CHOOSE US?

1. **FAST DELIVERY** Faster delivery by air by express. (DHL,UPS or Fedex)
2. **LONG HISTORY** 20 years experience in RFID & Access Control industry
3. **OEM ACCEPTABLE** 20 years OEM&ODM experience for 1000 + VIP client from US and Europe
4. **HIGH QUALITY** Design and manufacture high quality produtcs with 30 R&D; engineers.

APPLICATION

Bus, supermarket,school, government, hospital, factory

CERTIFICATE

Access Control CE | Access Control Rohs | EM Lock EMC Certificate | EM Lokc ROHS Certificate

RFID Card Reader CE | RFID Card Reader Rohs | UHF Reader CE Certifiate | UHF Reader ROHS