□□□□

Poe□□□□□□1

□□□□	□□□□
□□□	1080p□□□
□□□□	2.4g b / g / n
□□	□□□
□□	150□□□□
□□	□□128GB microSD□
□□	200UA□□□170mA□□
□□□□	IR□□□□□□□□B / W□□
□□	AC8-24V□DC 12-36V
□□	5000mah li-on□□□□6□□
□□□□	□□

□□□□

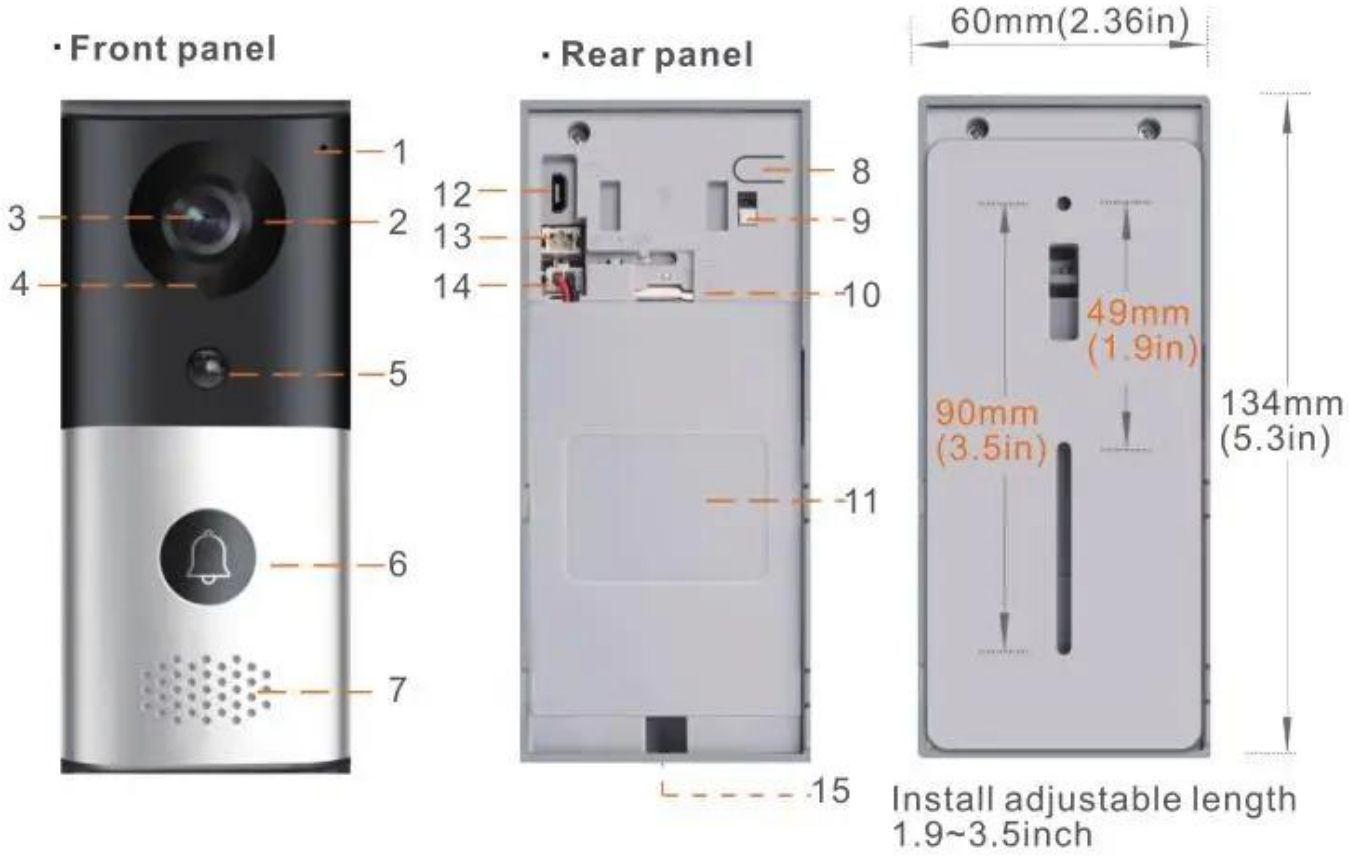
· Front panel
· Rear panel
60mm(2.36in)
1
2
3
4
5
6
7
8
9
10
11
12
13
14
15
49mm
(1.9in)
90mm
(3.5in)
134mm
(5.3in)
Install adjustable length
1.9~3.5inch

□□

Corner Kit
Video doorbell
Wedge Kit
Adhesive tape
Wire harness
Screwdrive
Screws and Anchors
Wire Clips
USB Cable
Option
Indoor chime
MicroSD

□□□□□□

□□□□□□□□□□□□□□□□ □□□□□□□□□□□□□□□□□□

The doorbell is supplied with 2x screws,
double sided tape and
1x tamper alarm screws.

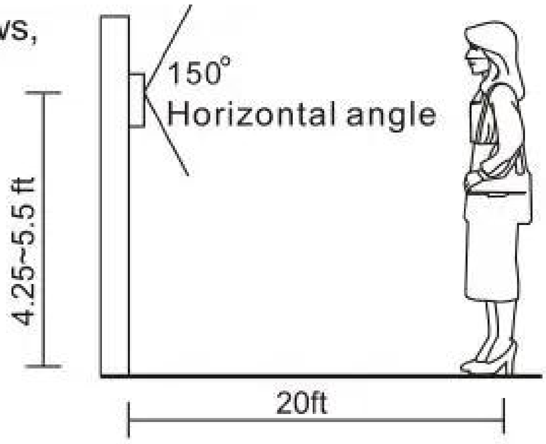

5.1 Should you not be able to use screws into walls or panels, double sided tape is applied to the housing.

□□□□

□□□WFIF□□□□□□ □□□□□□□□□□□□□□□□□□□□□□□□□□□□□□□ □□□□□□□□□□□□□□; □□□□□□□□□□□□□□□□□□□□; □□□□□PIR□□□□□□□□□□□□□□MicroSD□□□□□□□□□□□□□□□□□□□□□□□□□□□□ □□□□□□□□□□□□□□□□□□□□□□□□□□□□□□□□□□□□□Compatibel□

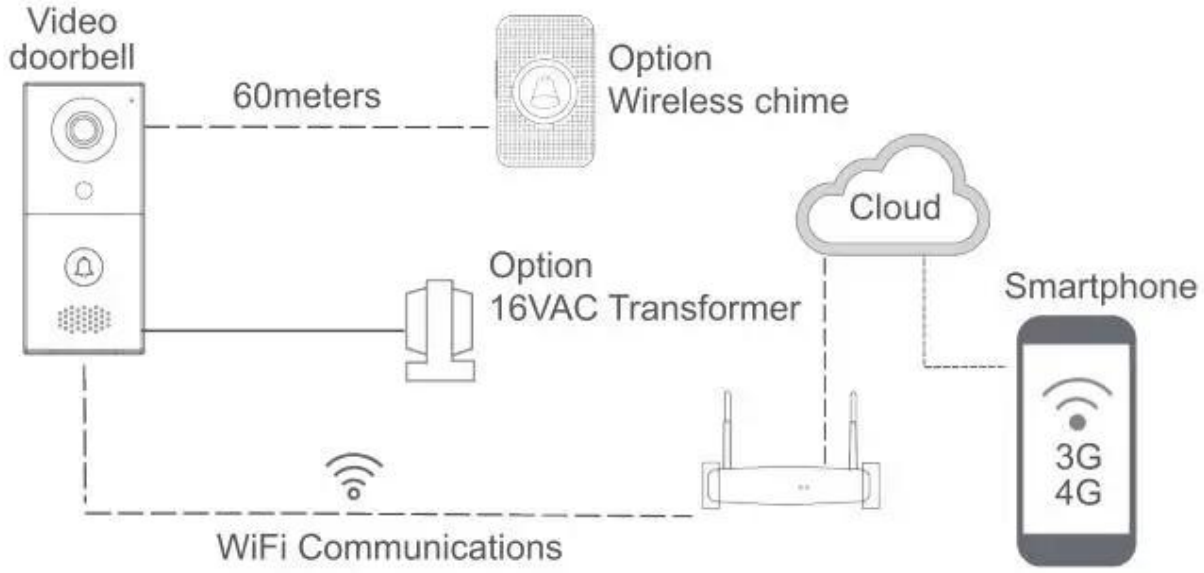

Chime Settings

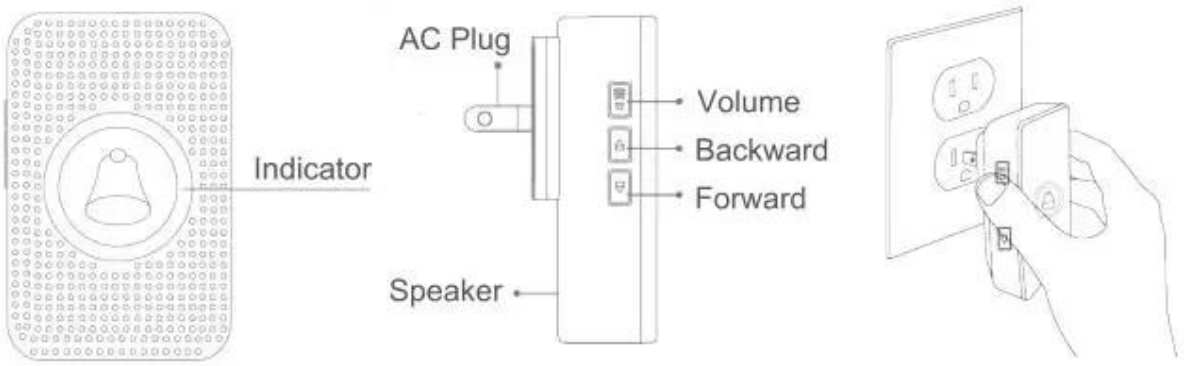

Windows□□□□

Windows□□□CMS□□□□□admin□□□□□□□□□□ □□□□□□□□□□□□ Onvif□□NVR□□□□□□□□

□□□□

- □□□□□□□□□□□□□□ACM Goldbridge□□□□□□□□□□□□□□□□□□□□□□□□□□□2□□□□
- □□□□□□□□□ACM Goldbridge□□□□□□□□□□□□□
- □□□□□□□□□□□□□□□□□□□

□□□□□

□□□□
□□□DHL□FEDEX□TNT□UPS□EMS□□□□□□□□□□□
□□□□□□□□□□□□□□□□□

□□

□□□□□

ACM-VB002

□□□□□□

ACM-VB001.

1080P□□WiFi□□□□

ACM-VB003.

2.4GHz□□□□□□

ACM-101.

1MP / 2MP□□□□WiFi□□

ACM-211V.

□□WiFi 360□Fisheye□□□□□□□

ACM-101x.

□□□□□□□□□□□WiFi□□□□

ACM-208.

125KHZ RFID WEIGAND□□□□□□□□□

ACM-WEG02

WEIGAND□□□□□2□□□□□□□□

ACM-Y066.

□□12V□□□□□□□□□

□□□□□□□□□□□□□□□□□□□□20□□□“□□”□
□□□□□□□□□□□□□□□□□□□□□□□□□□

□□□□□

1□□□□□□24□□□□
2□□□□□□□□□□□□□□□□□□□□□
3□OEM / ODM□□
4□□□□□□□□□□□□□□□□□□□□□
5□□□□□
1□□□□□□□□□□□□□□□□□□□
2□□□□□□□□□□□
3□□□□□□□□□□□□□□□□□□□□2-3□□□
6□□□□□ □□□□□1□5□□□□□□□7□30□
7□□□ □□□□□□□□□□□□T / T□□□□□PayPal□□□□□□
8□□□ □□□DHL□FedEx□TNT□UPS□EMS□□□□□□□□□□□□□□□□□□□□□□□□□□□

□□□□ □