□□□□

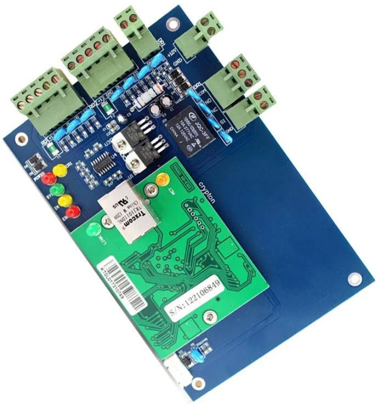

□□SDK□□□□TCP / IP□□□□□□PCB□Wiegand Gate□□□□□□

□□Access□□□□□□□□□□□□□□□PC□□□□□□□□

1□ □□□□□□□□□□□□□□□□□□□□□□TCP/IP

1
/
2
/
4
6
7
1
m
13

TCP/IP

□
□
□
□
□
□
□
□
□
□
□
□
□
□
□
□
□
□

□□□□

□□□

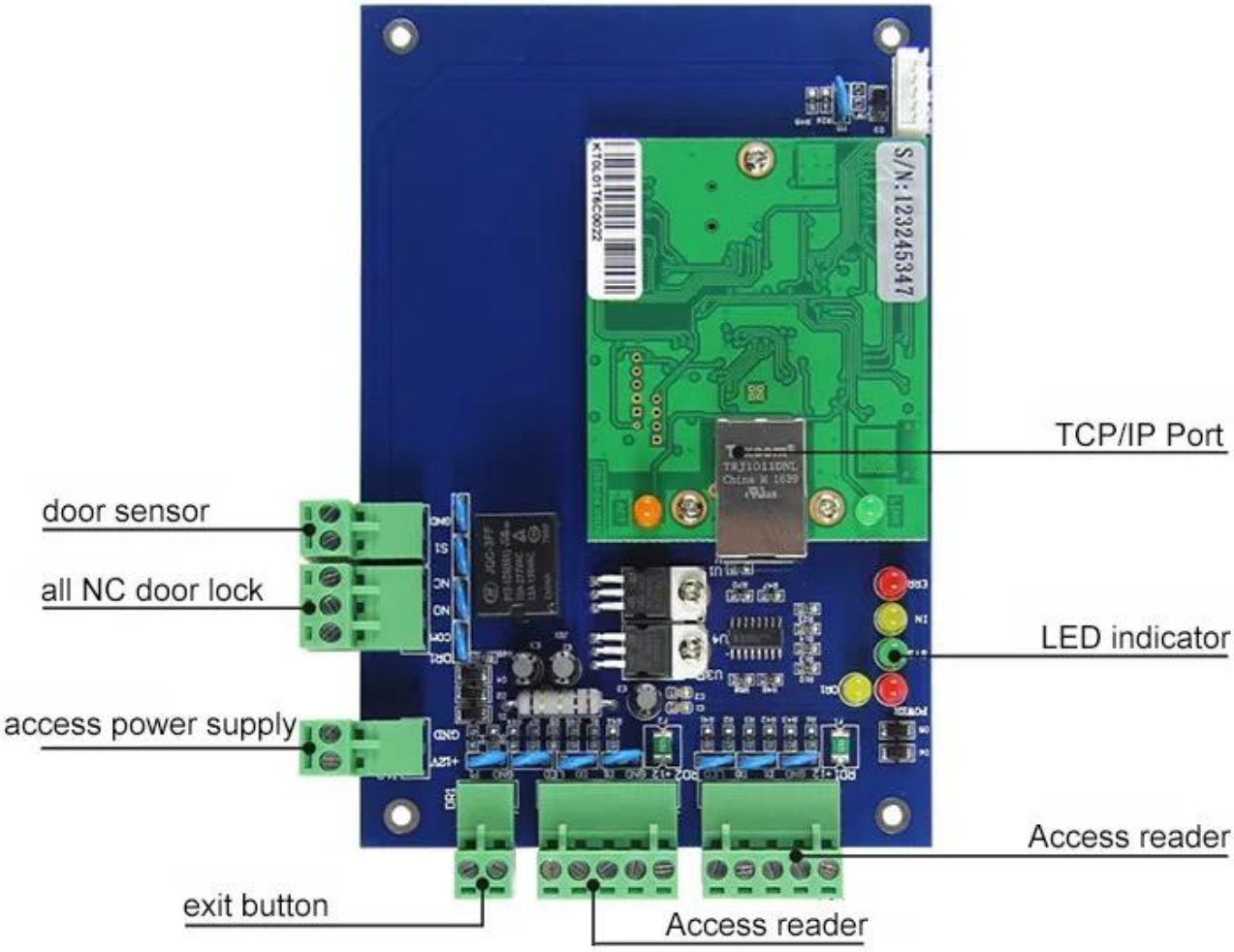
TCP/IP Port
door sensor
all NC door lock
LED indicator
access power supply
Access reader
exit button
Access reader

Signal Door Acess Controller Wiring Diagram（TCP/IP Communication）

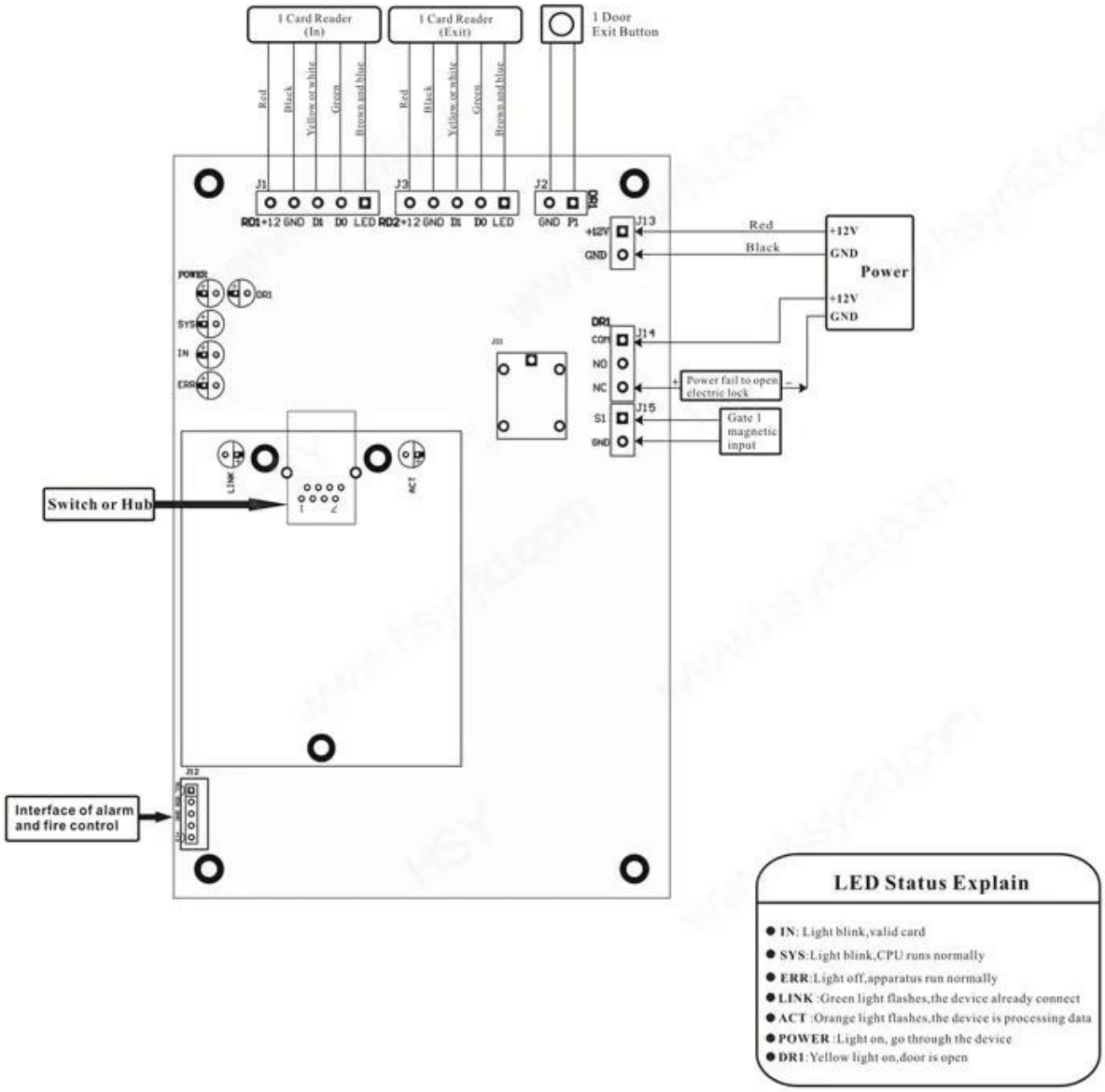

LED Status Explain

- **IN**: Light blink,valid card
- **SYS**:Light blink,CPU runs normally
- **ERR**:Light off,apparatus run normally
- **LINK** :Green light flashes,the device already connect
- **ACT** :Orange light flashes,the device is processing data
- **POWER** :Light on, go through the device
- **DR1**:Yellow light on,door is open

Scope of Application

Company

Hospital

Hotels

Logistics

Port

Financial

Government

Factory

Aviation

School

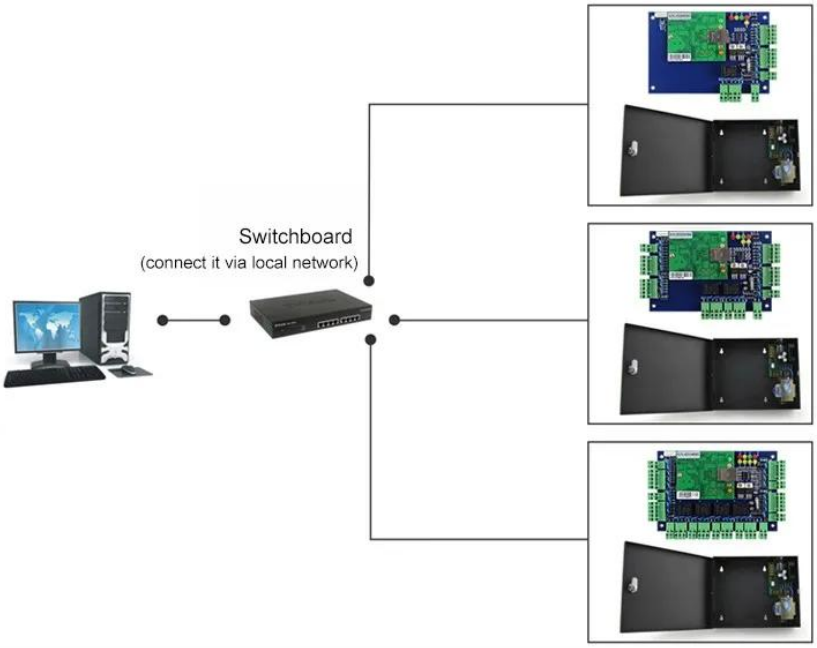

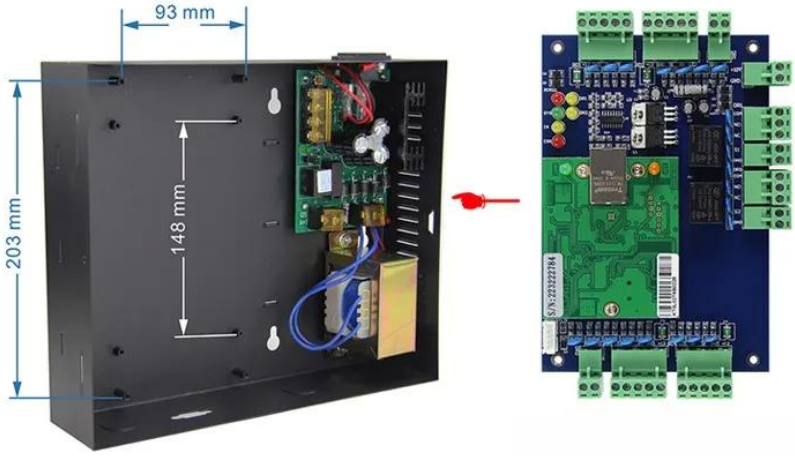

Kindly remind:

All network control board must configure with access power supply.
1 board for 1 power supply

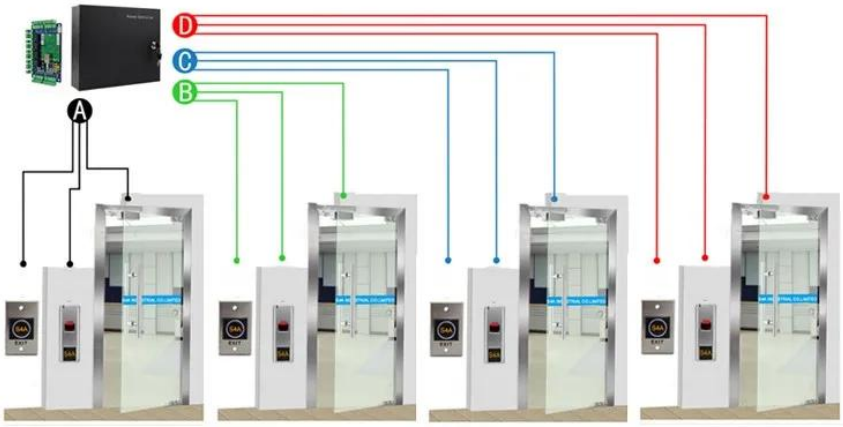

ACM-WEG04

Four doors 1 way: Control 4doors (Enter by Swipe cards and Exit by Push button)

[illegible]

[illegible]
[illegible]
[illegible]

[illegible]

[illegible]2000[illegible]RFID[illegible]/[illegible]CO[illegible]FTA[illegible]F[illegible]E ... Ect[illegible]
EXW[illegible]FOB[illegible]FCT[illegible]CIF[illegible]CFR ...[illegible]

[illegible]20[illegible]

[illegible]

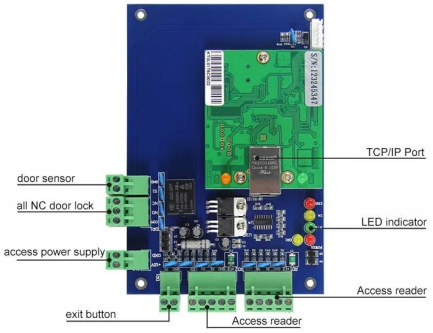

ACM-WEG01

□□□□□1□□□

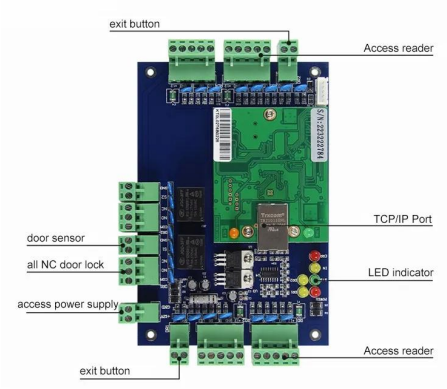

ACM-WEG02

□□□□□2□□

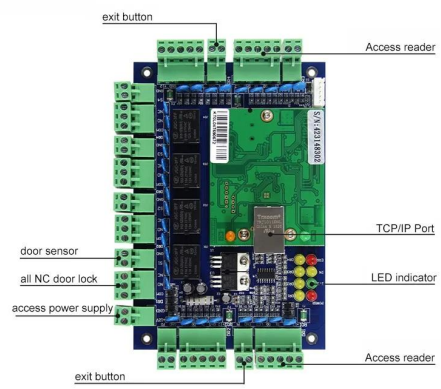

ACM-WEG04

□□□□□4□□□

You May Like

ACM-K2A / B

□LED□□□□□Realese□□□□

ACM-Y180

□□□□□□180□□□

ACM-Y806-5A

□□□□□□□□□5A

ACM225

□□□□RFID□□□□12khz

ACM-210

□□□□RFID Wiegand□□□□

ACM26X

125Khz EM□RFID□□□□
□□115mm×75.5mm×16.8mm

□□□□□

1□□□□□□24□□□□

2□□□□□□□□□□□□□□□□□□□□□□

3□OEM / ODM□□

4□□□□fashin□□□□□□□□□□□□□□□

5□□□□□

1□□□□□□□□□□□□□□□□□□□

2□□□□□□□□□□□□

3□□□□□□□□□□□□□□□□□□□2-3□□□

6□□□□ □□□□□□1□5□□□□□□□7□30□

7□□□□□ □□□□□□□□□□T / T□Western Union□Paypal□

8□□□ □□□DHL□FEDEX□TNT□UPS□EMS□SEA□AIR□□□□□□□□□□□□□□□□□□□□□□□

□□□□

□□1.□□□□□□□

□□□□□□□□□□□□□□□□□□□□□□□□□□□□□□□□□□□□□

□□2□□□□□□□□□□

□□□□□□□□□□Paypal□□□□□

□□□□□□□□□□□□□□□□DHL□FedEx□TNT UPS□□

□□3.□□□□□□□□□□□□□

□□□□□□□□□□□□□□□□□□□□□□□□□□□

□□4□□□□□□□□□□□□□

□□□□□□□□□ 5000□□□□□3-7□□100,000□□□□□7-15□

□□5□□□□□□□□□□

□□□OEM□□□

□□6□□□□□□□□□□□

□□□□□20□□□□□□RFID□/ NFC□□/ RFID□□/ RFID□□□RFID□□□□□□□□□□□□□□□□□□