产品描述
壁挂式标准电磁门吸
概述
ACM-G140是超低功耗的标准电磁门吸。有墙壁和地板两种安装方式。它具有中央联动信号输出，性能可靠，特殊设计避免剩磁。非常适用于各种防火通道和防火门。
功能
1.通过100Lbs超线性静推力测试
2.双释放模式：关机和手动按钮
3.适用于12VDC /24VDC
4.节能超低功耗设计
5.无剩磁设计，性能稳定
6.无源开关量信号输出
7. 壁装、地装明装或齐平安装
8.适用于带支架的玻璃门
规格
版本故障解锁
保持力 50公斤（100磅）
标准函数手动开门按钮
锁定状态传感器不
额定工作电压 DC 12V 或 24V（可调）
目前的消费 12V/180mA 24V/85mA
表面光洁度油漆和镀锌
环境温度（°C） -10°C - 55°C
适用于各种单双防烟门
磁铁尺寸（长 x 宽 x 深） 70L*43W*86H(mm)
电枢板尺寸（长 x 宽 x 深） 65L*65W*53H(mm)
重量公斤 0.9公斤
建筑用 CE 标志是的
建筑用 Rohs 标志是的
图片展示

NP-G140 is standard electromagnetic door holder with ultra low power consumption. There are 2 installation ways for wall and floor. It has signal output for central linkage and has reliable performance with special design avoiding residual magnetism. It is very suitable for all kinds of Fire exit and fireproof door.

G140 Dimensions

Armature Plate Dimensions:
65L*65W*53H(mm)

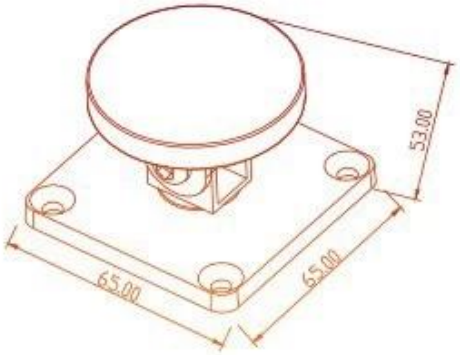

Magnets Dimensions:
70L*43W*86H(mm)

Release mode:

Fail-unlocked
(the door holder is unlocked when the current is off)

Manual Shut-Release Button

With a manual shut-release button.

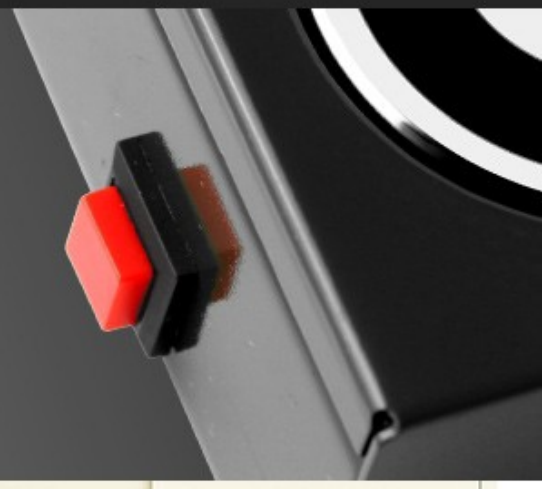

Automatically Close

Smoke doors automatically close when the fire broke out.

100 lbs
Super Linear Static

Pass 100 lbs super linear static thrust test.

Available for 12VDC /24VDC

Rated Operating Voltage DC 12V or 24V (Adjustable)

Energy saving
with ultra-low-power design

Current consumption: 12V/180mA 24V/85mA

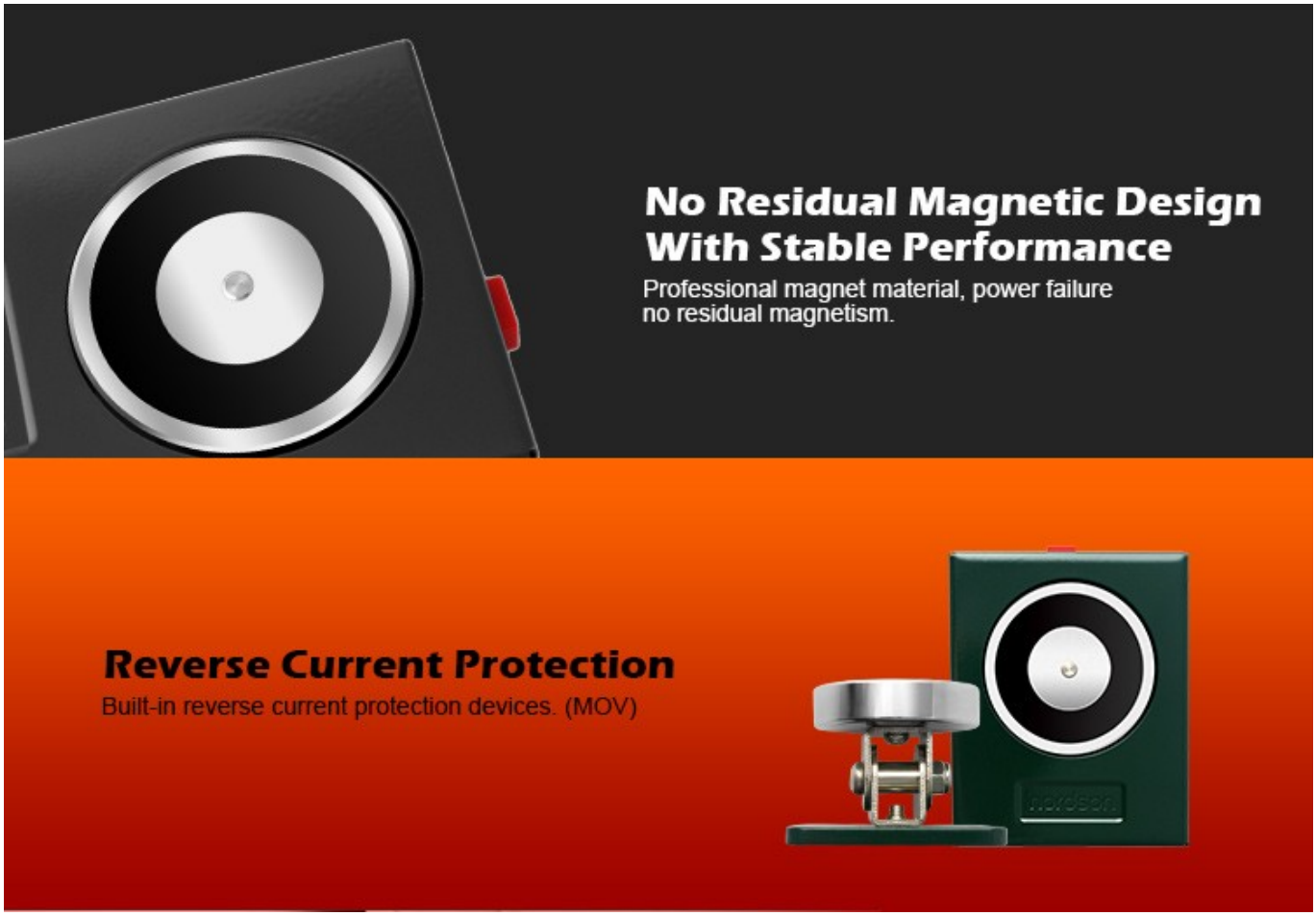
No Residual Magnetic Design
With Stable Performance
Professional magnet material, power failure
no residual magnetism.
Reverse Current Protection
Built-in reverse current protection devices. (MOV)

Fire Fighting Mode

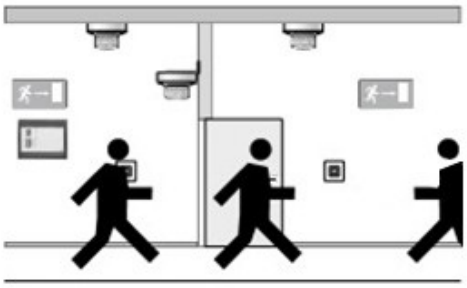

Normal state, normally open mode.

Fire fighting status, personnel evacuation.

End evacuation, transfer of personnel and Cut off the door holder power supply, close the door.

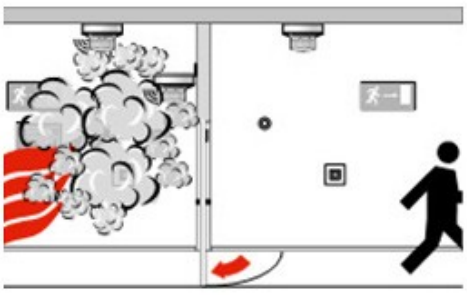

After the door closed, successfully blocked the spread of fire.

Available for Glass Door

Available for glass door with bracket

Installation Diagram

Suitable for All Kind of
Single & Double Smoke proof Doors.

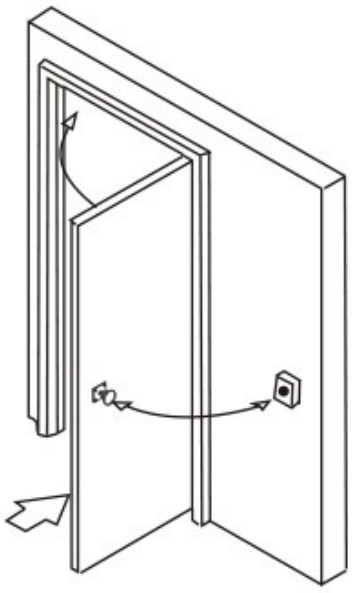

Fire Fighting Mode

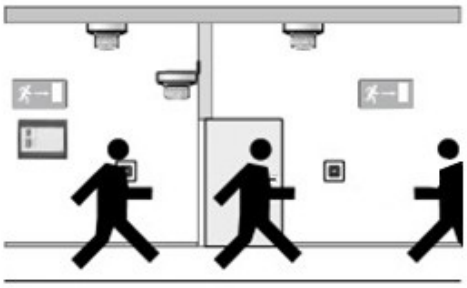

Normal state, normally open mode.

Fire fighting status, personnel evacuation.

End evacuation, transfer of personnel and Cut off the door holder power supply, close the door.

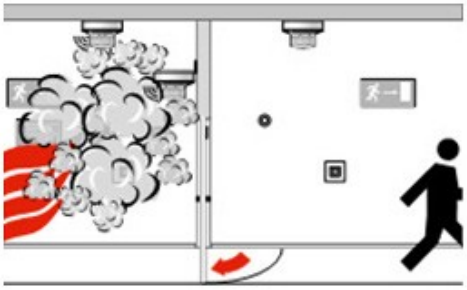

After the door closed, successfully blocked the spread of fire.

Scope of Application

Company

Hospital

Hotels

Logistics

Port

Financial

Government

Factory

Aviation

School

Access Control Accessory:

nordson®
Your Safety,We Care

PC Based Access Control Unit

Access Control

Proximity Access Card Reader

Proximity Card

Magnetic Lock

Eletric Bolt

Access Control Power Supply

Exit Button

□□□□

ACM
Access Contrkol Management

SHENZHEN GOLDBRIDGE INDUSTRIAL CO.,LTD

Door Loop / Closer/ Holder & Power Supply- Distributor Wholesale

RE:Access Control Power Supply

ACM-Y802-3A
Power Supply and door release exit button Dual Function
AC110V-240VDC, 12V 3A

M801B-3A /5A
Access Control Door Power Supply
Size: 190Lx85Wx80H(mm)
AC110V-240VDC

M806B-3A /5A
Access Control Door Backup battery Power Supply
Size: 190Lx85Wx80H(mm)
AC110V-240VDC

ACM-DB07
12V wired doorbell

ACM-VB003
WiFi Wireless Doorbell

ACM-GSM405
GSM Gate Opener
/GSM Remote Switch

ACM-Y803A
Voltage: DC 12V /3A

ACM-5A
12V 5A door control system 12V 5amp access power supply with battery backup
(Special For access control board use)
Size: 279x234x67MM
Input Voltage:110-240V
Voltage: DC 12V /3A

RE:Door Loop / Door Closer

ACM401 Door Loop

ACM601F 200mm Metal
ACM601S 200mm stainess steel

ACM-101 130mm Longer
ACM-102 180mm Longer

ACM-301 400mm Longer

ACM-201 400mm Longer

Door Closer
ACM-M59 25-45KG
ACM-M60 45-65KG
ACM-M61 65-85KG

RE:Sensor and Siren For Access Control System

ACM-FP410A
Drawer Cabinet Lock

ACM-FP710A
Fingerprint Bag Lock

ACM-S408
IR beam outdoor /indoor Motion Sensor

Item: AS603
Piezo Strobe Siren
Operating voltage: 12VDC

Item: AS31
Operating distance: 16mm ±5mm Switch output: NC

Door Holder

Item: ACM-MD601
Standard Wall Mount Door Holder
Holding force: 60kg(120Lbs)

Item: ACM-MD602
Glass door Mount Door Holder with door signal
Holding force: 60kg(120Lbs)

RE:Remote Control For Access Control System

Item: ACM-K19A/B
Metal WIRELESS Remote Control

Item: ACM-R402/404
WIRELESS Remote Control

Item: ACM-R403/405
Wireless 433MHz RF Remote control

Item: ACM-R407
2 Channel AC/DC Remote receiver

Item: ACM-R408/409
Wireless 433MHz RF Remote control

Whatsapp: +86-14554918707 , E-mail: lilyjiang_06@163.com, sales@goldbridgesz.com ; www.goldbridgesz.com

For More Proudcts Price List and informations , Please contact our sales at sales@goldbridgesz.com, thank you !

□□□□□

□□□□□□
□□□□□0.3kg
□□□□□10cm x 10cm x 8cm

□□“□□”□□

□□□

□□□□□ Realese □□□□

K2B: 86*86mm

无触摸门 Realese 退出传感器

K9A: 115*40mm

开门按钮，（不锈钢，NO/NC）K5B: 86*86mm

Door Release

PRESS
TO EXIT

开门按钮，（钢铝，NO），K4B：86*86mm
不锈钢 高品质 Kirsite。 K14B：86*86mm
不锈钢门释放按钮； K815B：86*86mm
我们的服务
1，任何询问将在24小时内回复
2，专业制造商和供应商，欢迎访问我们的网站和我们的工厂
3, OEM/ODM 可用
4、高品质、时尚的设计、合理且有竞争力的价格、快速的交货期
5、售后服务：
1), 所有产品在包装前都经过严格的内部质量检查
2), 所有产品在发货前都会包装好
3), 如果损坏不是人为造成的，我们所有的产品都有 2-3 年保修
6、交货更快 : 样品订单约 1~ 5 天，批量订单约 7~30 天
7、付款方式：您可以通过以下方式支付订单：T/T、Western Union、Paypal
8、运费：我们与 DHL、FEDEX、TNT、UPS、EMS、海运和空运货代有很强的合作，您也可以选择自己的货运代理。
常问问题
问: 1.我怎样才能下订单？
A: 请通过电子邮件向我们列出您的要求。然后我们会尽快将报价发送给您，订单确认后，我们会尽快安排生产。
问: 2.付款和发货怎么样？
A: T/T，Paypal，西联汇款。
客户可以选择海运、空运或快递（DHL、FedEx、TNT UPS 等）

**问: 3.□□□

20+ YEARS EXPERIENCE

OEM & ODM

ACCESS CONTROL SYSTEMS ONE STOP SOLUTION PROVIDER

Goldbridge is Top 10 China Manufacture On Alibaba,
Specializes In Provide Kinds Of RFID/NFC Cards, FID Tags, RFID Card Reader, UHF Reader, Access Control System, Electromagnetic Locks, etc Since 1999

Customized Services | Qually Assurance | Fast Delivery | Best After-Sales Service

OUR FACTORY

- **Access Control and RFID Reader Production Line:**
- Monthly production quantity is up to 50,000pcs , We are Provides OEM&ODM services including product research and development, LOGO printing, customized.etc

- **Electromagnetic lock & Smart Door Lock Production Line :**
- Monthly production quantity is up to 100,000pcs ,
- Our factory is built with modern manufacture environment, facilities, equipment and professional operation technicians.
- Goldbridge Provides OEM&ODM services including product research and development, LOGO printing and product box customized.

- **RFID & NFC Cards & Tags Production Line :**
- RFID Tag, Wristband, Keyfob: 11,000,000pcs (monthly output)
- Four Production Lines For Smart Card, PVC Card, Prelam Sheet: 20,000,000pcs (monthly output)
- Goldbridge Provides OEM&ODM services for LOGO printing, development, customized.

ADVANTAGE

WHY CHOOSE US?

1. **FAST DELIVERY** Faster delivery by air by express. (DHL,UPS or Fedex)
2. **LONG HISTORY** 20 years experience in RFID & Access Control industry
3. **OEM ACCEPTABLE** 20 years OEM&ODM experience for 1000 + VIP client from US and Europe
4. **HIGH QUALITY** Design and manufacture high quality produtcs with 30 R&D; engineers.

APPLICATION

Bus, supermarket,school, government, hospital, factory

CERTIFICATE