□□□□

□□□□□□□□□□□□□125khz rfid□
□wiegand26□□□□□□

□□

1.□□□□□□□□□□□□□□□□□□□□□□ □□□□□□□□□□□□

2.□□□□26□□□□□□□□□□□□□□

3.□□□□□□□□□□□□□□□□□□□□□□□□□□□□□

4.□□□□□□□□□□□□□□□0.1□□

5.□□□□□□□□□□□□□□□10000□□□□□600□

6□□□□□□□□□□□□□□□□□□□□□□□□□□□□□

7.□□□□□□□□□□□□□□

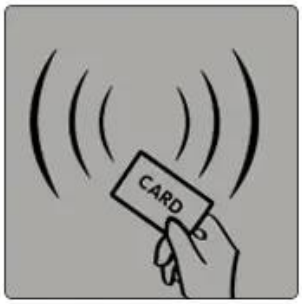

Common Power Supply

Note: The magnetic contact and alarm function is optional

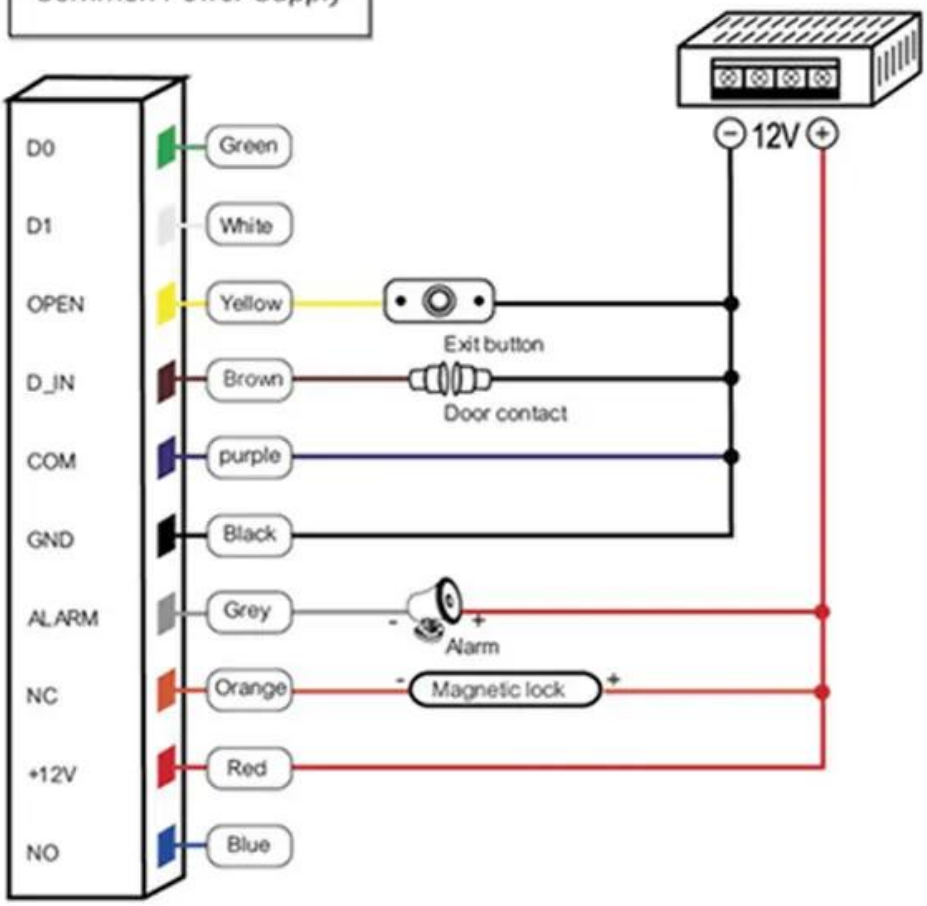

Card Reader Mode Diagram

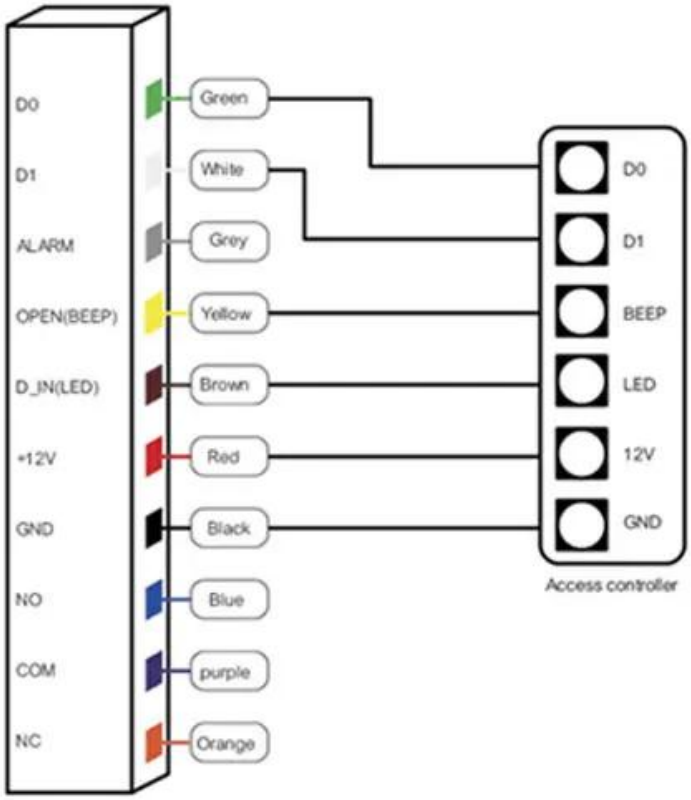

□□

□□□□26□□□□□□□□□□□□

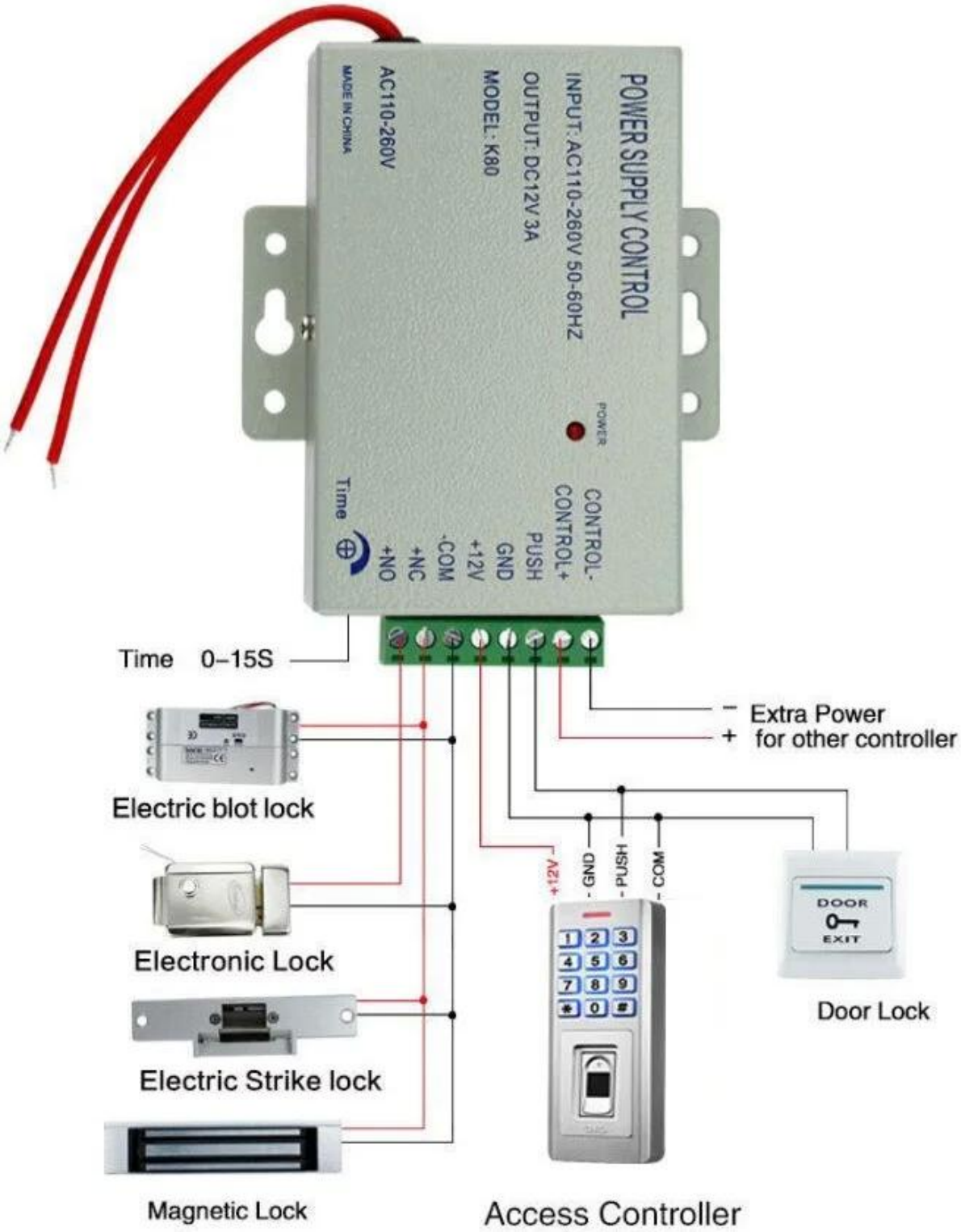
POWER SUPPLY CONTROL
INPUT: AC110-260V 50-60HZ
OUTPUT: DC12V 3A
MODEL: K80
AC110-260V
MADE IN CHINA
POWER
Time
CONTROL-
CONTROL+
PUSH
GND
+12V
-COM
+NC
+NO
Time 0–15S
− Extra Power
+ for other controller
Electric blot lock
Electronic Lock
Electric Strike lock
Magnetic Lock
+12V
GND
PUSH
COM
Access Controller
DOOR
EXIT
Door Lock

□□□□□

□□□□
□□□DHL□FEDEX□TNT□UPS□EMS□SEA□AIR□□□□□□□□□□□□□□
□□□□□□□□□□□□□□□

□□
□□□□□□□□□□1□□□□30□□

□□□□□

□□□□□□□□□□□□□□□□□□□□□□□□□□□□□□□□

ACM223

□□□□RFID□□□□□□□□□□□125Khz EM 1000/4000□□

ACM209-NW

□□□□RFID□□□□□□□□□□□125Khz EM

ACM208

□□RFID□□□□□□□□□□

ACM210

□□RFID□□□□□□□□□□□

ACM225

□□□□RFID□□□□□125Khz EM□□□□□□□□
□□

ACM211B

□□□□□□□□□□RFID□□□□□□□□□□□

□□□□□

1□□□□□□□24□□□□□
2□□□□□□□□□□□□□□□□□□□□□□□□□□
3□OEM / ODM□□
4□□□□□fashin□□□□□□□□□□□□□□□□□□
5□□□□□□
1□□□□□□□□□□□□□□□□□□□□□□□
2□□□□□□□□□□□□□□
3□□□□□□□□□□□□□□□□□□□□□□2-3□□□
6□□□□□ □□□□□□□1□5□□□□□□□□7□30□
7□□□□□□ □□□□□□□□□□□□□T / T□Western Union□Paypal□Ali□□□
8□□□□ □□□DHL□FEDEX□TNT□UPS□EMS□SEA□AIR□□□□□□□□□□□□□□□□□□□□□□□□□□□

□□□□

□□1.□□□□□□□
□□

□□2□□□□□□□□□□□
□□□□□□□□□□Paypal□□□□□□
□□□□□□□□□□□□□□□DHL□FedEx□TNT UPS□□

3.

4

5000 3-7 100,000 7-15

5

OEM

6

20 RFID / NFC / RFID / RFID RFID