□□□□

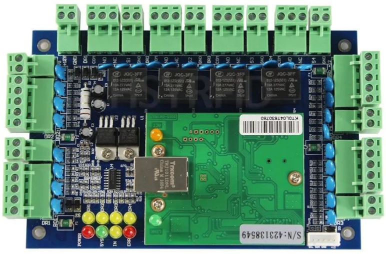

□□□TCP / IP + WG26 RFID 4□□□□□□

□□□□□□□□□□□□□□□□□□□□□□□□□□□□Access□□□□□□□PC□
□□□□□□□□□□

4□□

□□□□□□□□□□□□□□□□□□□□TCP/IP

1
/
2
/
4
6
1
m
6
TCP/IP

[illegible]

+[illegible]

[illegible]

[illegible]…[illegible]NO[illegible]NC[illegible]

□□......□□□
□□□□□□□□□□□□□□□□

□□□□□□□□□□□□□□□□□□□□□□□□

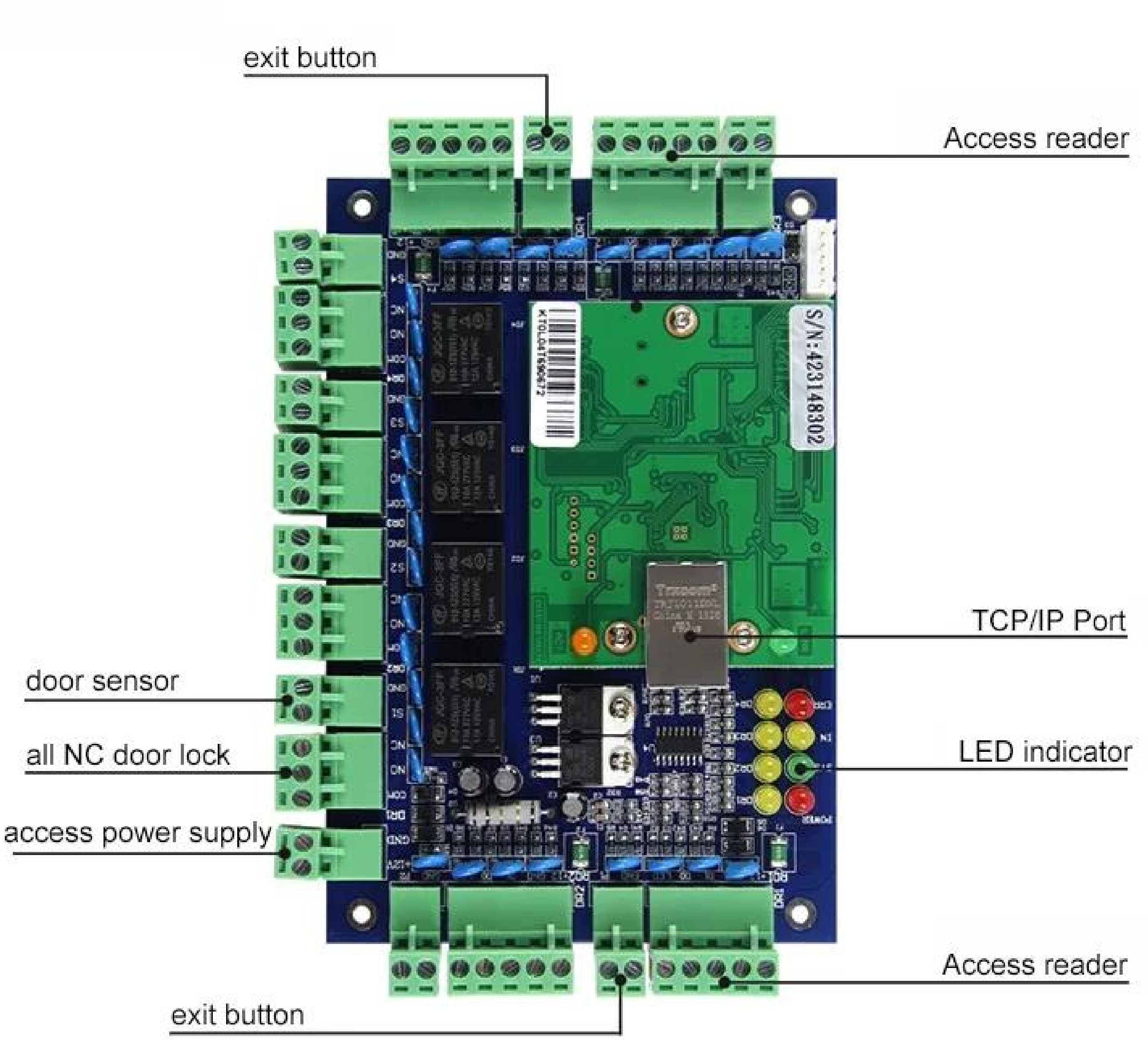
exit button
Access reader
S/N:423148302
TCP/IP Port
door sensor
all NC door lock
LED indicator
access power supply
Access reader
exit button

Four Door Acess Controller Wiring Diagram（TCP/IP Communication）

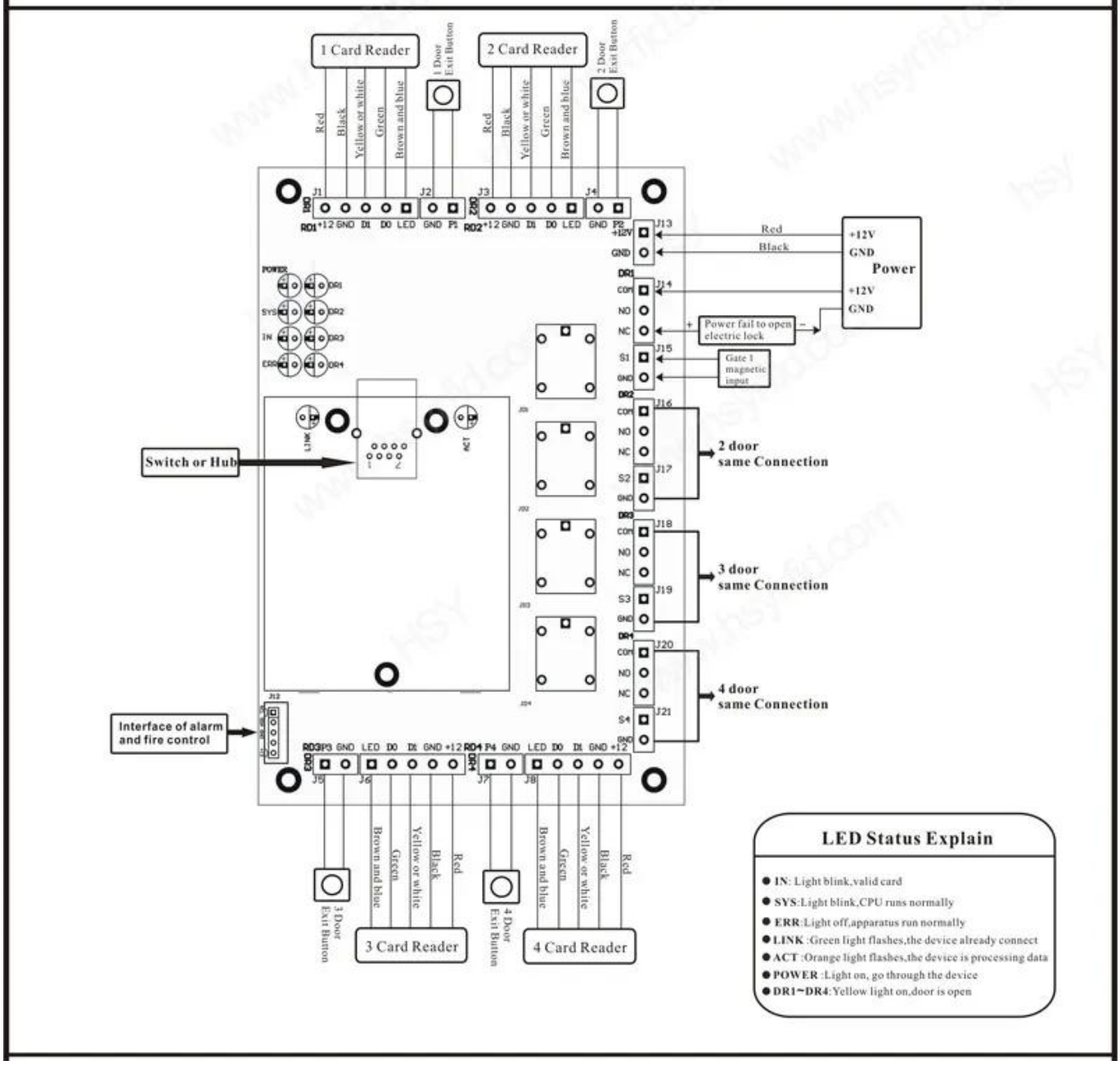

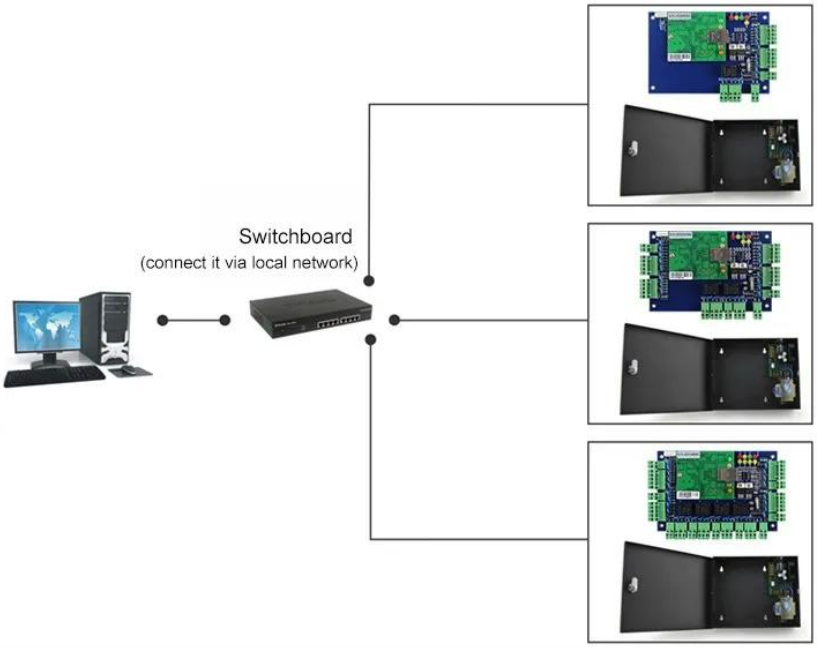

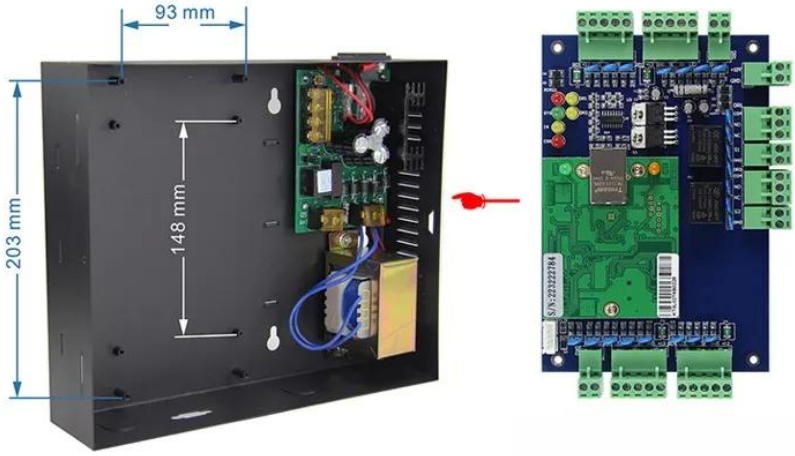

Kindly remind:

All network control board must configure with access power supply.
1 board for 1 power supply

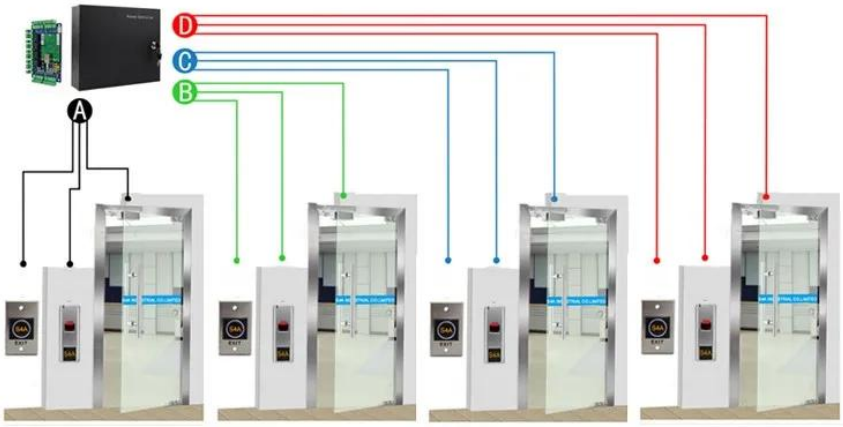

ACM-WEG04

Four doors 1 way: Control 4doors (Enter by Swipe cards and Exit by Push button)

Scope of Application
Company
Hospital
Hotels
Logistics
Port
Financial
Government
Factory
Aviation
School

[illegible]

[illegible]
[illegible]
[illegible]

[illegible]

2000[illegible]RFID[illegible]/[illegible]CO[illegible]FTA[illegible]F[illegible]E[illegible]……[illegible] EXW[illegible]FOB[illegible]FCT[illegible]CIF[illegible]CFR ...[illegible]

[illegible]20[illegible]“[illegible]“[illegible]

You May Like

ACM-K2A / B

□LED□□□□□Realese□□□□

ACM-Y180

□□□□□□□□180kg□

ACM-Y806-5A

5A□□□□

ACM225

□□□□RFID□□□□12khz

ACM-210

□□□□RFID Wiegand□□□□

ACM26X

125Khz EM□RFID□□□□
□□115mm×75.5mm×16.8mm

□□□□□

1□□□□□□□24□□□□□
2□□□□□□□□□□□□□□□□□□□□□□□□
3□OEM / ODM□□
4□□□□□fashin□□□□□□□□□□□□□□□□□□□□□
5□□□□□□
1□□□□□□□□□□□□□□□□□□□□□□
2□□□□□□□□□□□□□□□
3□□□□□□□□□□□□□□□□□□□□□□□2-3□□□
6□□□□ □□□□□□1□5□□□□□□□7□30□
7□□□□□□ □□□□□□□□□□□□□□□□□□□□□□□□□□
8□□□□ □□□DHL□FEDEX□TNT□UPS□EMS□SEA□AIR□□□□□□□□□□□□□□□□□□□□□□□□□□□□

□□□□

□□1.□□□□□□□

□□□

□□2□□□□□□□□□

-□□□□□□□□□□□□□□□□□□

□□□□□□□□□□□□□□□DHL□FedEx□TNT UPS□□

□□3.□□□□□□□□□□□

□□□□□□□□□□□□□□□□□□□□□□

□□4.□□□□□□□□□□□□

□□□□□□□□□□5000□□□3-7□□100,000□□□7-15□

□□5.□□□□□□□□□□

□□□□□□□□□□□□□□□□□□□□□□□□□□□□□□□□OEM□□□

□□6.□□□□□□□□□□□

□□□□□20□□□□□□RFID□/ NFC□□/ RFID□□/ RFID□□□RFID□□□□□□□□□□□□□□□□