Description des produits

Description des produits

ACM Emergency Door Release Interrupteur Contrôle d'accès sans contact avec le bouton de sortie de sortie

Fonctionnalité:

. Pas de capteur de sortie sans contact / touche (détection diffus)

· Technologie optique / infrarouge

· Plaque en acier inoxydable IP-55 Ingress Protection / Sus 304

· Convivial (protection saine)

·· Sans les maladies contagieuses réparties

·· Plage de détection: 0,1 à 10 cm

· Sortie de relais normalement ouverte / normalement ferme / commune

· Indicateurs LED jumeaux pour la veille des capteurs ou approché:

(1) Compte

Détails Images

Détails Images

EXIT

NoTouch
EXIT

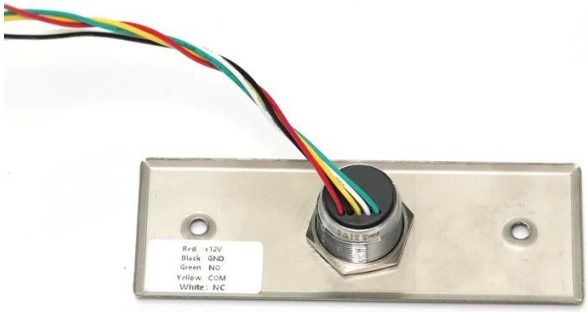
Red: +12V
Black: GND
Green: NO
Yellow: COM
White: NC

NoTouch

Parmenmeurs de produits

Numéro de modèle	K-E012
Nom de produit	Interrupteur de bouton de sortie sans toucher
Matériel	Acier inoxydable
Taille du produit	86 * 86 mm
Tension d'alimentation	12VDC
Sortie de contact	NON / NC / COM / LED
Courant maximum	3A / 125-250VAC
Test d'endurance	100 000 fois
Installation:	**Cadre de porte creuse (installation dissimulée)**
Paramètres d'emballage	100pcs / 15kg / 51 * 43 * 33cm / ctn

Détails des produits

Touchless Sensor Exit Button

Specification

- **Dimensions**: 86L*86W*26H(mm)
- **Contact Rating**: 12-24V，3A
- **Power**: 12VDC or 24VDC
- **Output Contact**: NO/NC/COM
- **Mechanical Life**:100,000 Tested
- **Suitable for Door**: Hollow Door
- **Logo**: Customizable
- **Weight**: 0.15kg
- **Operating Temp**: -20℃~+55℃ (14~131F)
- **Operating Humidity**: 0-95%(relative humidity)
- **Detection Range**: 5-15cm (Adjustable)
- **LED Indicator**: Blue LED (Standby)
  Green LED (Sensation)
- **Surface Mount:** Optional M86 Metel Back Box
- **Panel:** 0.7mm Thick 304 Stainless steel
- **Package Quantity:** 100PCS/52*43*33cm/ctn

Product Dimension

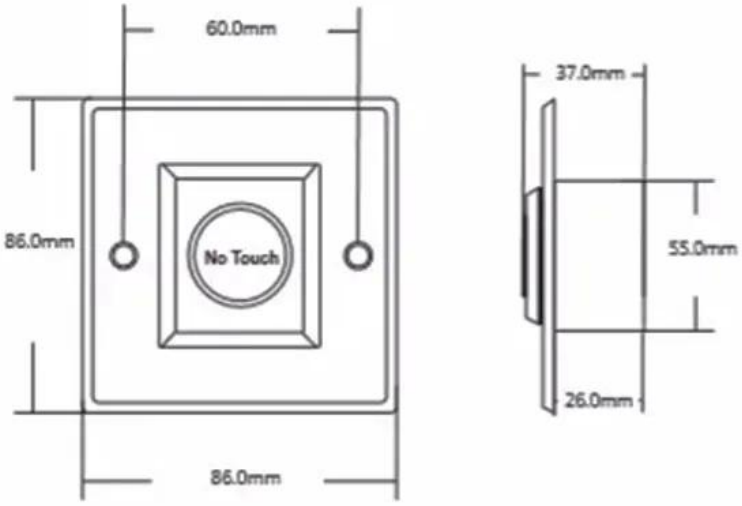

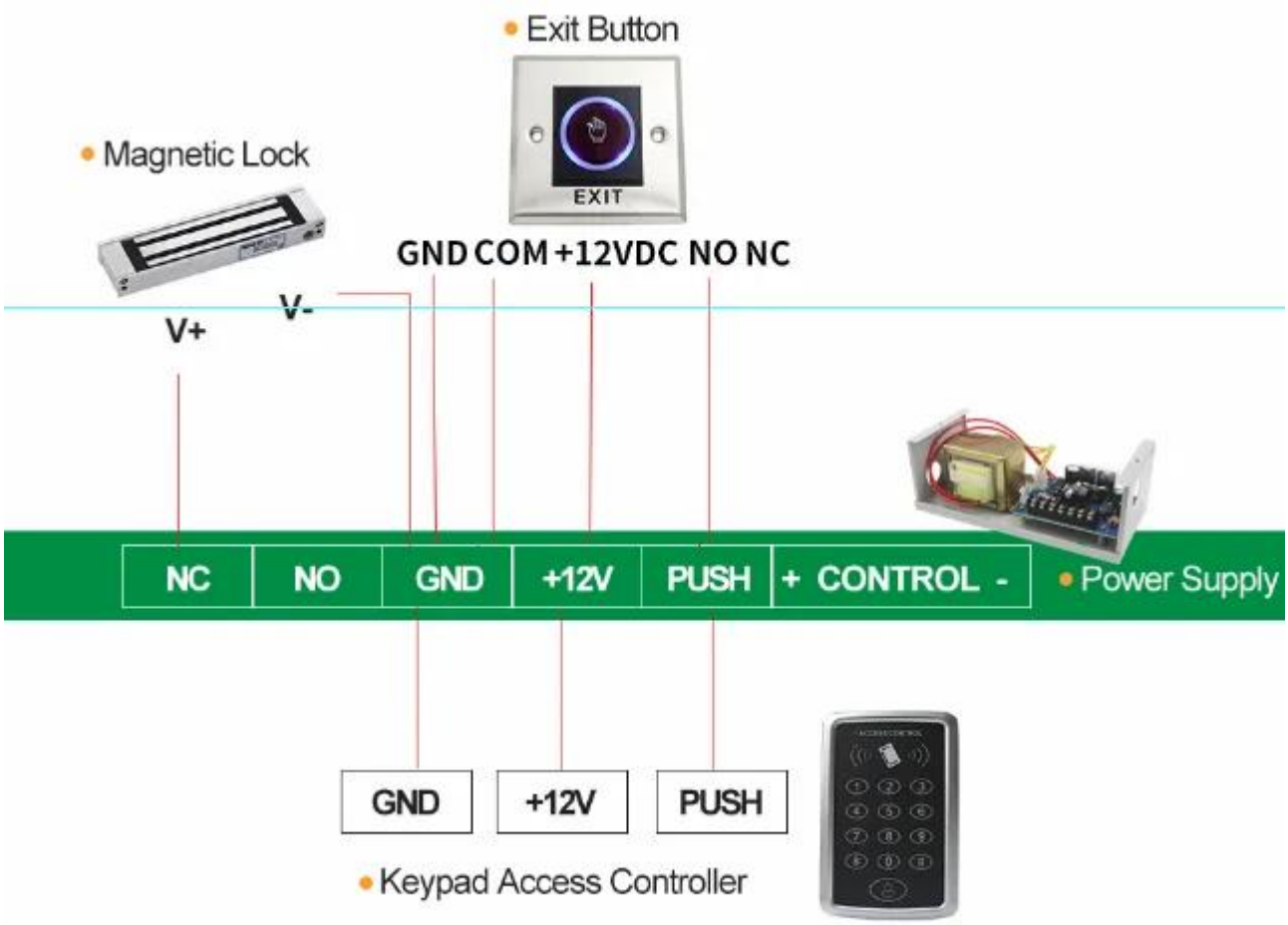

Recommander des produits

Recommander des produits
Système de verrouillage des casiers
Système de verrouillage de la porte de l'hôtel
Système de verrouillage intelligent du bureau à domicile
Système de contrôle d'accès
Système de parking

Produits connexes

ACM

EXIT BUTTON

Email: **sales@goldbridgesz.com**

K6A **K6AL** 91x28x20mm | **K6D** 115x70x25mm | **K6DL** 115x70x25mm | **K6DW** 115x70x25mm | **K4A** **K4AL** 86x50x33mm

K6B 86x86x38mm | **K6BL** 86x86x38mm | **K4B** 86x86x33mm | **K4BL** 86x86x33mm

K14E **K14EL** 115x40mm | **K14F** 115x70mm | **K14FL** 115x70mm | **K14A** **K13AL** 115x40mm | **K14** 115x70mm | **K14DL** 115x70mm

K14B 86x50mm | **K14BL** 86x50mm | **K13B** 86x86mm | **K13BL** 86x86mm | **K13BE** 86x86mm

K13AB 115x40mm | **K13A** 115x70mm | **K13D** 86x50mm | **K13BD** 86x86mm | **K14C** 80x30x24mm | **K14CL** 80x30x24mm

K15A 53x53x25mm | **K15AL** 53x53x25mm | **K15B** 53x53x25mm | **K15C** 53x53x25mm

K7A 91x28mm | **K7B** 115x70mm | **K8A** 86x86x38mm | **K8BL** 86x86x38mm | **K4AC** 86x86x38mm | **K4AD** 86x86x38mm

K6AM 115x40mm | **K6BM** 115x70mm | **K6CM** 86x50mm | **K6DM** 86x86mm | **K15BG** 53x53x25mm | **K15BR** 53x53x25mm

K14BR 80x30x25mm | **K14BG** 80x30x25mm | **M40** 115x40mm | **M70** 115x70mm | **M50** 86x50mm | **M86** 86x86mm

TOUCH BUTTON

Email: **sales@goldbridgesz.com**

K9A 86x86x20mm | **K9B** 86x50x20mm | **K40A** 86x86x18mm | **K40B** 86x86x18mm | **K40C** 86x40x18mm

NO TOUCH EXIT BUTTON

K2B 86x86x35mm | **K2A** 115x70x25mm | **K9C** 86x86x11.5mm | **K10A** 86x86x14mm

K201G 92x92x33mm | **K201** 113x63x20mm | **K406** 80x32x23mm | **K-WS** 80x80x28mm

K505 Capacitive 86x86x14mm | **K505W** Capacitive 86x86x14mm | **K505MH** Infrared 86x86x14mm | **K505MHW** Infrared 86x86x14mm

K841A 115x40mm | **K841C** 115x70mm | **K841B** 86x86mm | **K842A** 115x40mm | **K843A** 115x40mm

PLASTIC BUTTON

Email: **sales@goldbridgesz.com**

K1 86x86x25mm | **K1-1** 86x86x24mm | **K1-2** 86x86x25mm | **K1-3** 86x86x20mm | **K11A** 76x23x14mm

Rated Current: 40A, Power off: 20s delay | **P86** 86x86x35mm | **P77** 77x77x45mm

EMERGENCY DOOR RELEASE

Email: **sales@goldbridgesz.com**

K3R 86x86x50mm | **K3Y** 86x86x50mm | **K3G** 86x86x50mm | **K3W** 86x86x50mm

K3RR 86x86x50mm | **K3RG** 86x86x50mm | **K3** 87x87x60mm | Transparent

K4G LED/Buzzer Red | **K4GB** LED/Buzzer Green | **K4GL** Without LED 90x93x45mm | **K4RG**

Information de l'entreprise

20+ YEARS EXPERIENCE

OEM & ODM

ACCESS CONTROL SYSTEMS ONE STOP SOLUTION PROVIDER

Goldbridge is Top 10 China Manufacture On Alibaba,
Specializes In Provide Kinds Of RFID/NFC Cards, FID Tags, RFID Card Reader, UHF Reader, Access Control System, Electromagnetic Locks, etc Since 1999

Customized Services | Qually Assurance | Fast Delivery | Best After-Sales Service

ADVANTAGE

WHY CHOOSE US?

1. **FAST DELIVERY** Faster delivery by air by express. (DHL,UPS or Fedex)
2. **LONG HISTORY** 20 years experience in RFID & Access Control industry
3. **OEM ACCEPTABLE** 20 years OEM&ODM experience for 1000 + VIP client from US and Europe
4. **HIGH QUALITY** Design and manufacture high quality produtcs with 30 R&D; engineers.

OUR FACTORY

- **Access Control and RFID Reader Production Line:**
- Monthly production quantity is up to 50,000pcs , We are Provides OEM&ODM services including product research and development, LOGO printing, customized.etc

- **Electromagnetic lock & Smart Door Lock Production Line :**
- Monthly production quantity is up to 100,000pcs ,
- Our factory is built with modern manufacture environment, facilities, equipment and professional operation technicians.
- Goldbridge Provides OEM&ODM services including product research and development, LOGO printing and product box customized.

- **RFID & NFC Cards & Tags Production Line :**
- RFID Tag, Wristband, Keyfob: 11,000,000pcs (monthly output)
- Four Production Lines For Smart Card, PVC Card, Prelam Sheet: 20,000,000pcs (monthly output)
- Goldbridge Provides OEM&ODM services for LOGO printing, development, customized.

APPLICATION

Bus, supermarket,school, government, hospital, factory

CERTIFICATE

Access Control CE | Access Control Rohs | EM Lock EMC Certificate | EM Lokc ROHS Certificate

RFID Card Reader CE | RFID Card Reader Rohs | UHF Reader CE Certifiate | UHF Reader ROHS

PRODUCT CATEGORY

RFID / NFC SMART CARD

Be customized according to you need

Fit for systems of transport, E-payment, Access Control, Event, Loyalty, ect.

View More

ACCESS CONTROL SYSTEM

Security for All: Network Access Control Board ,Standalone Access Controller, Biometric Access Control, T&A time attendance, Facial Access Control

View More

RFID & LONG RANGE UHF READER

20+ Years of professional Experience in production of rfid uhf hardware

- UHF desktop reader writer,
- UHF integrated reader,
- UHF R2000 fixed reader,

View More

ELECTRONMAGNETIC LOCK

Professional Electric Locks Manufacturer In China

Electromagnetic lock with OEM & ODM since 1999 60KG /110KG /180KG /280KG /350KG /500KG

View More

FAQ

Q1 How can I place an order?

A1 Click start to order or list your requirement to us by email. Then we will send the offer to you ASAP, after the order confirmed, we will arrange production ASAP.

Q2 What about the payment and shipment?

A3 T/T , Paypal, Western Union etc.
You can choose your agent or via our agent by sea, air or express (DHL,FedEx, TNT UPS etc.)

Q4 How can I get a sample to check your quality?

A4 We could provide the sample to you, pls check the sample cost and freight cost with us.

Q5 How long can I expect to get the goods?

A5 It depends on the quantity and shipping way. You can check with us before ordered.

Q6 Can your products be customized?

A6 Almost all of our products are customized , including the material, size, thickness and printing. OEM orders are highly welcome.

Contact Us

BACK TO HOMEPAGE