Utilizzare una sola volta le guarnizioni dei bulloni di tenuta dei bulloni del contenitore ad alta sicurezza

CAD

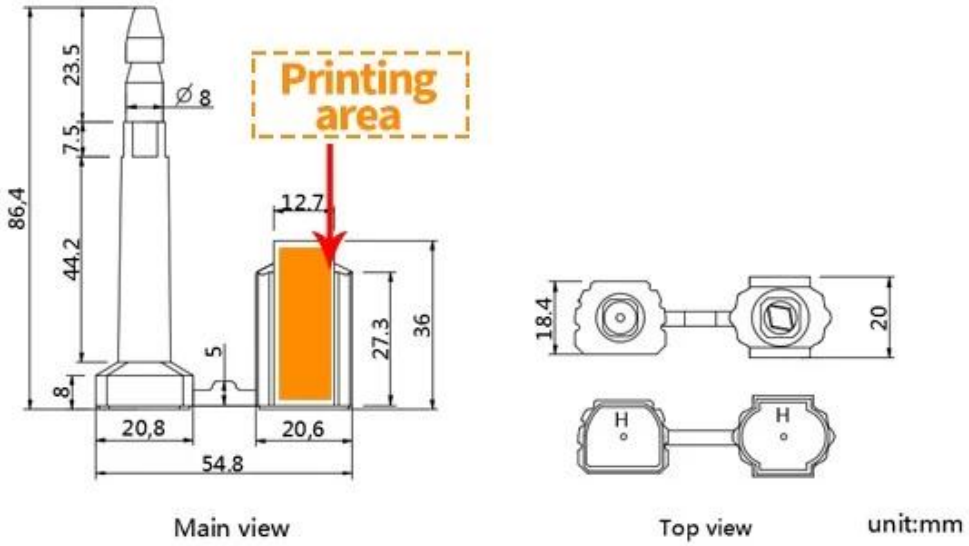

Product size and other content can be customized according to customer requirements

Product packaging and shipping

We have complete product packaging and shipping methods

■ PRODUCTS DETAILS

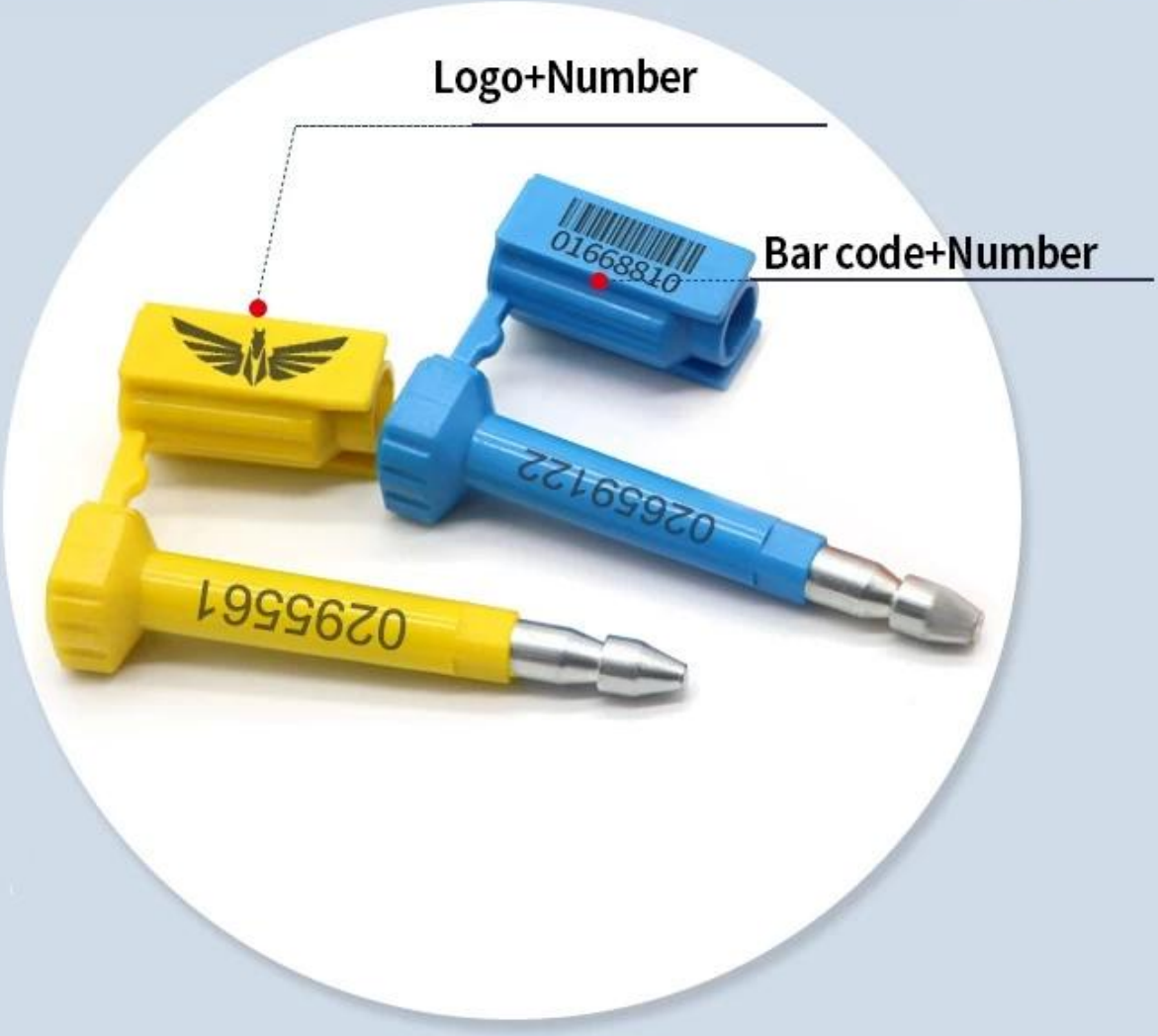

Printing content can be customized according to customer requirements

HIGH QUALITY

Large-scale chemical plant

BRAND STRENGTH
OWN FACTORY

FAST DELIVERY

FACTORY DIRECT SALES

LARGE QUANTITY DISCOUNT

SUPPORT CUSTOMIZATION

Many colors are available

■ APPLICATION

Informazioni aziendali

20+ YEARS EXPERIENCE

OEM & ODM

ACCESS CONTROL SYSTEMS ONE STOP SOLUTION PROVIDER

Goldbridge is Top 10 China Manufacture On Alibaba,
Specializes In Provide Kinds Of RFID/NFC Cards, FID Tags, RFID Card Reader, UHF Reader, Access Control System, Electromagnetic Locks, etc Since 1999

Customized Services | Qually Assurance | Fast Delivery | Best After-Sales Service

OUR FACTORY

- **Access Control and RFID Reader Production Line:**
- Monthly production quantity is up to 50,000pcs , We are Provides OEM&ODM services including product research and development, LOGO printing, customized.etc

- **Electromagnetic lock & Smart Door Lock Production Line :**
- Monthly production quantity is up to 100,000pcs ,
- Our factory is built with modern manufacture environment, facilities, equipment and professional operation technicians.
- Goldbridge Provides OEM&ODM services including product research and development, LOGO printing and product box customized.

- **RFID & NFC Cards & Tags Production Line :**
- RFID Tag, Wristband, Keyfob: 11,000,000pcs (monthly output)
- Four Production Lines For Smart Card, PVC Card, Prelam Sheet: 20,000,000pcs (monthly output)
- Goldbridge Provides OEM&ODM services for LOGO printing, development, customized.

ADVANTAGE

WHY CHOOSE US?

1. **FAST DELIVERY** Faster delivery by air by express. (DHL,UPS or Fedex)
2. **LONG HISTORY** 20 years experience in RFID & Access Control industry
3. **OEM ACCEPTABLE** 20 years OEM&ODM experience for 1000 + VIP client from US and Europe
4. **HIGH QUALITY** Design and manufacture high quality produtcs with 30 R&D; engineers.

APPLICATION

Bus, supermarket,school, government, hospital, factory

CERTIFICATE

Access Control CE | Access Control Rohs | EM Lock EMC Certificate | EM Lokc ROHS Certificate

RFID Card Reader CE | RFID Card Reader Rohs | UHF Reader CE Certifiate | UHF Reader ROHS

PRODUCT CATEGORY

RFID / NFC SMART CARD

Be customized according to you need

Fit for systems of transport, E-payment, Access Control, Event, Loyalty, ect.

View More

ACCESS CONTROL SYSTEM

Security for All: Network Access Control Board ,Standalone Access Controller, Biometric Access Control, T&A time attendance, Facial Access Control

View More

RFID & LONG RANGE UHF READER

20+ Years of professional Experience in production of rfid uhf hardware

- UHF desktop reader writer,
- UHF integrated reader,
- UHF R2000 fixed reader,

View More

ELECTRONMAGNETIC LOCK

Professional Electric Locks Manufacturer In China

Electromagnetic lock with OEM & ODM since 1999 60KG /110KG /180KG /280KG /350KG /500KG

View More

FAQ

Q1 How can I place an order?

A1 Click start to order or list your requirement to us by email. Then we will send the offer to you ASAP, after the order confirmed, we will arrange production ASAP.

Q2 What about the payment and shipment?

A3 T/T , Paypal, Western Union etc.
You can choose your agent or via our agent by sea, air or express (DHL,FedEx, TNT UPS etc.)

Q4 How can I get a sample to check your quality?

A4 We could provide the sample to you, pls check the sample cost and freight cost with us.

Q5 How long can I expect to get the goods?

A5 It depends on the quantity and shipping way. You can check with us before ordered.

Q6 Can your products be customized?

A6 Almost all of our products are customized , including the material, size, thickness and printing. OEM orders are highly welcome.

Contact Us

BACK TO HOMEPAGE >