DC 12V [illegible]/[illegible]/ NC[illegible]2[illegible]

Y-100S 2[illegible]

[illegible] 25 L x 35 W x 4 H [illegible]

9 L x 2 5 W x 2 H mm DC 1 2 V 9 mA 1 2 mA 8 Kg

8mm

-10+55°C

41131F090

5□□□□□□□□□□□□□□□□□□□□□□□□□.7□2□kg

□□□□□□□□□

1.□□□□□□□□□□□□□□□□

□□□□□□□□□□

3.□□□□□□□□□3□□□□□□□□□□□□□

4. 500000□□□□□□□□□□

5. MOV□□□□□□□□□□□□□□□

□□□□□□□□□□□□□□□□□□□□□□□□□□□□

7.□□□□□□□□□□□□□□□□

8.□□□□□□□□□

A□□□□□□□□□□□□□□□□

B□□

C□□□□□□□□□□□□□□□□□□□□□□□

□□□□□□□□□□□□OEM / ODM

PRODUCT INFORMATION
IF STICKER IS BROKEN
POSITION

[□□□□□□□□□□□□□□]

ACM-Y100□□□□ □□□□□□□□□□□□□□□□□□□□□□□□ □□□□□□□□□

ACM-Y100S

Response Speed Setting
Feedback Signal
High Quality Material
Strong Practicability

Low fuel consumption
High economic benefits
Sturdy Structure
Easy operating

□□□□

- □□□□□□□□□□□□□□□□□□□□□□□□□□□□□□□□□□□ACMGoldbridge□□□□□□□□□□□□□2□□□□□□□□□□□□□□
- □□□□ACM Goldbridge□□□□□□□□□□□□□□□□□□□□
- □□□□□□□□□□□□□□□□□□□□□□□□□□□

□□□□□□□□□□□

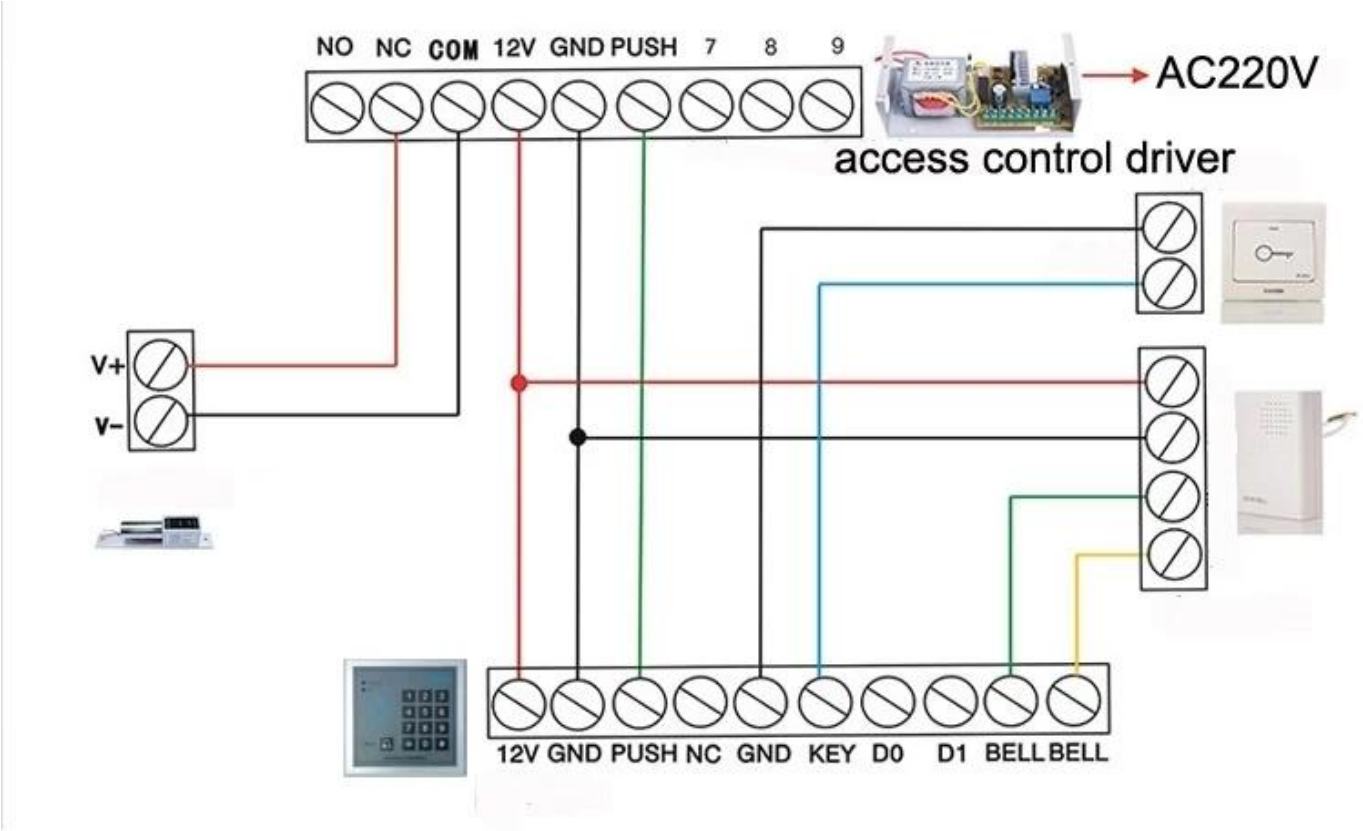

□□□□□

□□□□
□□□□□□□□□□□□□□□□□□DHL□FEDERAL EXPRESS□TNT□UPS□EMS□□□□□□□□□□□□□□□□□□□□
□□□□□□□□□□□□□□□□□□□□□□□□□□□□□□

□□
□□□□□□□□□1□□□□1□□□□□□□□□□30□□
□□□□□□□□□□ 54.5×20×30.5□□□□□□□□□□□□□□22□□□□□□□□□□□50□□□□□

ACM-Y100S(NO)
10-8888-6
ELECTRIC DROPBOLT LOCK
1PCS
Made in China

ACM-Y100S(NO)
10-8888-6
ELECTRIC DROPBOLT LOCK
1PCS
Made in China

You may need

ACM-Y100S 2□□

□□□□□□□□□□□□
□□□□□100MA /□□900MAPower□2PIN□□
□□□□□□

ACM-Y100S 5□□

□□□□□□□□□□□□
□□□□□□□□□□□□□□□□□□□□□□□□□□□□□5PIN

ACM-Y500A

□□□□□□□□□□□W /□□□□□□□□□
□□205x30x38mm

ACM-Y280

□□□□□□□□□□□280kg / 600lbs□

ACM-Y131

□□□□□□□□□□□□□□□□□□□□□□□□□□□□□□□□□□□□
□□□□NC / NO□

ACM-Y066

□□□□□□□□□□□□□□□□□□□□□□□□
□□□□□□□130x98x41mm

□□□□□□□

1□□□□24□□□□□□□□□
2□□□□□□□□□□□□□□□□□□□□□□□□□□□□□□□□□□□□□□
3□□□□□□OEM / ODM
4□□□□□fashin desing□□□□□□□&□□□□□□□□□□□
5□□□□□□□□□□□□
1□□□□□□□□□□□□□□□□□□□□□□□□□□□□□□□□□
2□□□□□□□□□□□□□□□□□□□□□□□□□
3□□□□□□□□□□□□□□□□□□□□□□□□□□□□□□□□□□2 - 3□□□□□□□□
6□□□□□ □□□□□□□□□□□□□□1□5□□□□□□□□□□□□7□30□
7□□□□□ T / T□□□
8□□□□ □□□□□□□□DHL□FEDERAL EXPRESS□TNT□UPS□EMS□□□

□□□□□□

Q□1.□□□□□□□□□□□□□
A□E□□

Q□2.□□□□□□□□□□□□□□□□□
A□□□□□□T / T□□□□□□□□□□□□□□□□
□□□□□□□□□□□□□DHL□Federal Express□TNT UPS□□□□□□□□□□□□□□□

Q□3.□□□□□□□□□□□□□□□□□□□□□□□□□□□□□□□□
A□□□□□□□□□□□□□□□□□□□□□□□□□□□□□□□□□□□□□□□

Q□4□□□□□□□□□□□□□□□□□□□□□□
A□□□□□□□□□□□□□□□5000pcs□□□□3-7□□□□100,000pcs□□□□7-15□

Q□5□□□□□□□□□□□□□□□□□□□□
A□□ OEM□□□□□□□□□□

Q□6.□□□□□□□□□□□□□□□□□□□□
□□□□□20□□□□□RFID□□□/ NFC□□/ RFID□keybod / RFID□□□□□□□□rfid□□□□□□□□□□□□□□□□□□□□□□□□□□□□1□□□□