[illegible]

[illegible] zk [illegible] wifi [illegible]
[illegible] [illegible]

. 4 [illegible]
[illegible]
500 [illegible]8 [illegible] [illegible]

[illegible]	[illegible] [illegible]	
[illegible]	500	
ID[illegible]	500	
[illegible]	RS232/485[illegible]TCP/IP[illegible]USB [illegible]	
[illegible]	[illegible]	
[illegible]	[illegible]	
[illegible]	13.56Mhz	
[illegible]	DC12V	
[illegible]	0℃[illegible]45℃	
[illegible]	[illegible] V 10.0	
[illegible]	0.65kg	
[illegible]×[illegible]×[illegible]mm	88×88×40mm([illegible]×[illegible]×[illegible])	

[illegible]

1.[illegible]
2.[illegible]4[illegible]

3.Fingerprint&ID □□□□□□□ □□□□□□□Finger V10.0 □□□□□□□□□□□□□□□□□□

4.□□□□□□□□□□□□□□□□□□□□
5.□□□□□□□□□□□□□□□□□□□□□□□□;
6.□□□□□□□□□□□□□□□□□□□□□□□□□500□□□□□□□□□□□□□□□□□□□
7.□□□□□□□□□□□□□□□□□□□□□□□□□□□;
8. □□□□□□□□□□□□□ □□□□□□□□□□□□

□□□□□

ACM-851 □□□□□□□ □□□□□□□□ □□□□□□ Rfid □□□ □□□□□□□□□□□ □□□□□□□□□□□□

4□□□□□□□□□

1.□□

2. □□□□□

3. □□□

4.□□□□□□□□□

□□□□□□□□□□□□□□□

Finger 10.0□□□□□□□□□□□ACM-851□□□□□□□□□□□□□□□□□□□□□□□□□□86□□□□□□□□□□□□□□□□□□□□□□□□□□□□□□ □□

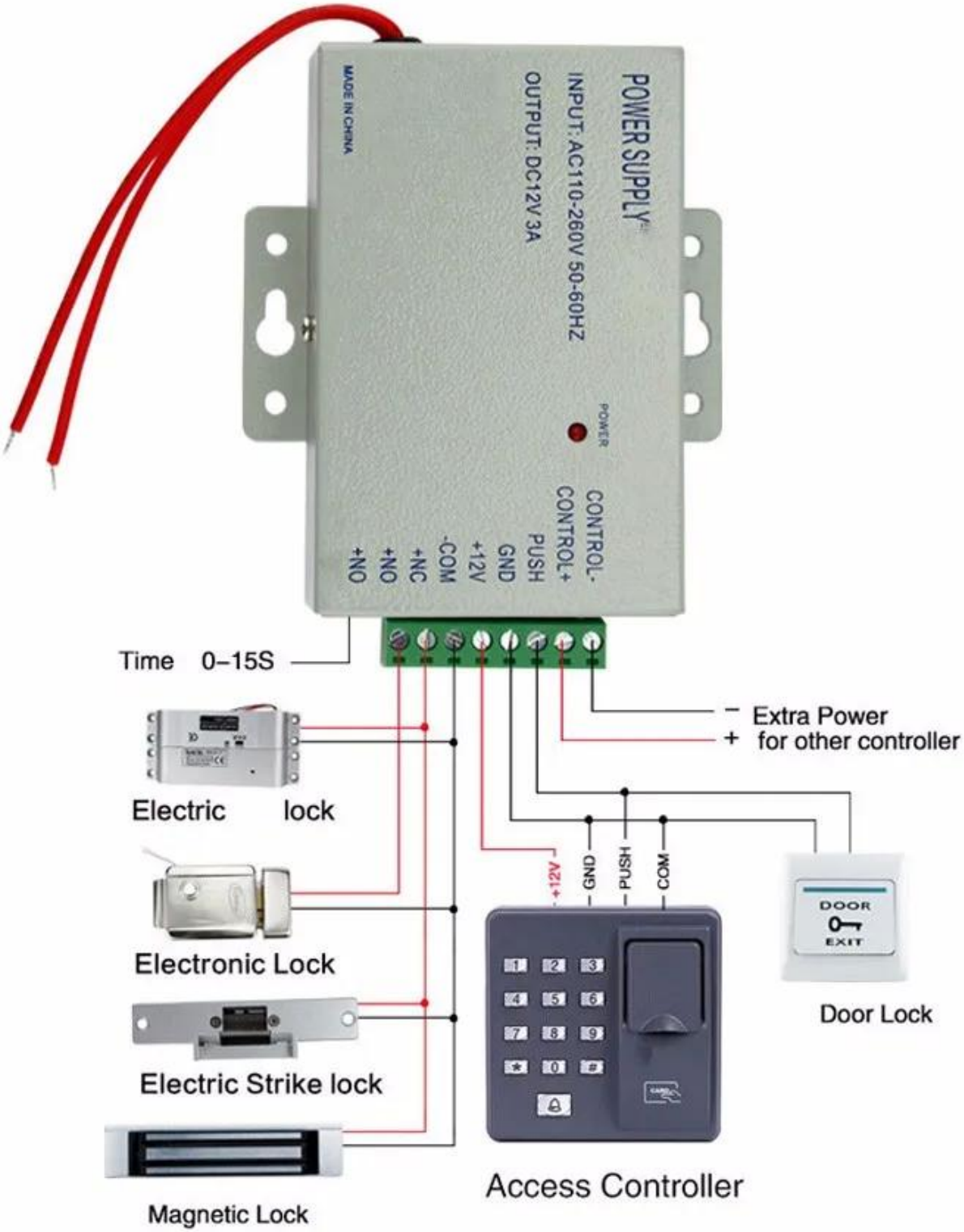
POWER SUPPLY
INPUT: AC110-260V 50-60HZ
OUTPUT: DC12V 3A
MADE IN CHINA
POWER
CONTROL-
CONTROL+
PUSH
GND
+12V
-COM
+NC
+NO
+NO
Time 0–15S
− Extra Power
+ for other controller
Electric lock
Electronic Lock
Electric Strike lock
Magnetic Lock
+12V
GND
PUSH
COM
Access Controller
DOOR
EXIT
Door Lock

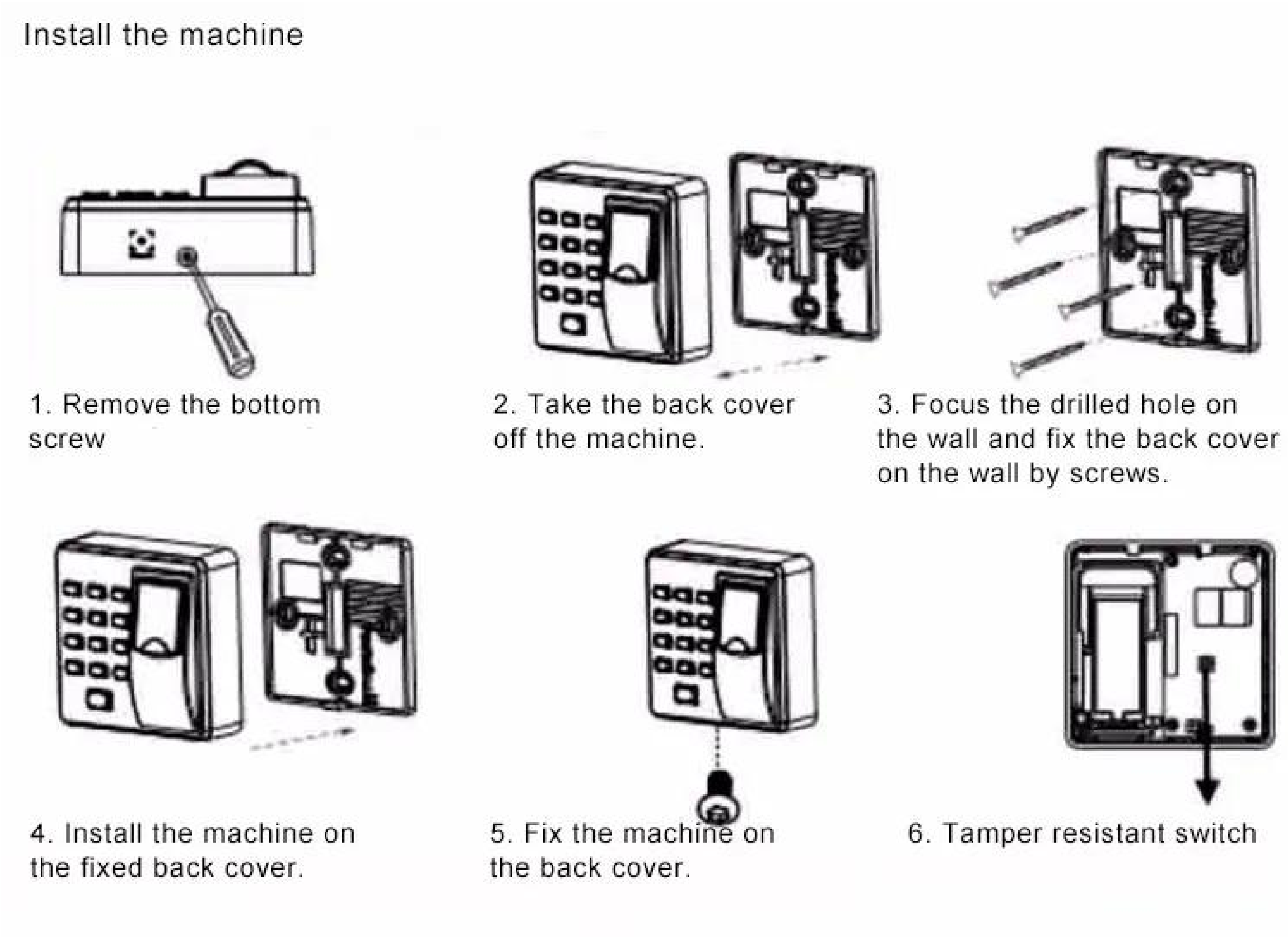

□□□□□

□□□□
□□□□□DHL□FEDEX□TNT□UPS□EMS□□□□□□□□□□□□□□□□□□□□□□□□□□□□□□□

□□□□□□□□□□□□□□□□□□□□□□

□□
□□□□□ □□□□□□□□□□□□: 1 □□□□ 1 □□□□□1 □□□□□□□ 24 □□
□□□□□□□□: □□□□□ 6.5 □□ □□□□□□□□□□□ 49 X 29 X 27 cm

□□□□□□□□□□□□□□3 □□□□□□□□□□□□□□□□□□□□□□□!!!

□□□□

Access Control System

Complete Door Access Control Solution Provider

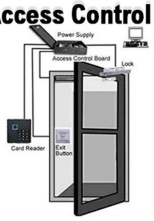

Hot Selling Equipments

BEST SELLERS

Standalone Fingerprint & RFID Outdoor Waterproof Access Controller

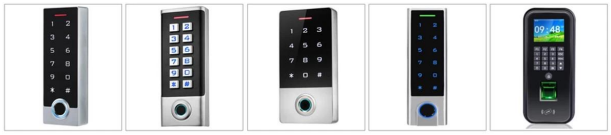

ACM-209E | ACM-209V | ACM-209H | ACM-210E | ACM-9800

ACM-209D | ACM-209F | ACM-851 | ACM-TM07 Face Recognition | ACM-TM05 Face Recognition

Standalone Waterproof Metal RFID Access Control

ACM-211A | ACM-212A | ACM-208A | ACM-210A | ACM-208B

ACM-208C | ACM-A65 | ACM-A55 | ACM-210F | ACM-209A

Standalone Waterproof Touch Screen /Keypad RFID Access Controller

ACM-230K | ACM-230T | ACM-223 | ACM-225 | ACM-227

ACM-226 | ACM-301C | ACM-301D | ACM-212 | ACM-212C

Touch Screen Standalone Waterproof Metal RFID Access Controller

ACM-A40 | ACM-A50 | ACM-A10 | ACM-A20 | ACM-A30

ACM-A60 | ACM-A80 | ACM-A88 | ACM-A21 | ACM-A51

1.□□□□□□□□24□□□□□□□□□□□□□

2. [illegible]

3.[illegible]OEM / ODM

4.[illegible]fashin desing[illegible]

5.[illegible]

A[illegible]

B: [illegible]

C: [illegible] 2 [illegible] 3 [illegible]

6.[illegible]1[illegible]5[illegible]7[illegible]30[illegible]

7. [illegible]: T/T[illegible] [illegible]

8.[illegible]DHL[illegible]FEDEX[illegible]TNT[illegible]UPS[illegible]EMS[illegible]SEA[illegible]AIR[illegible]

[illegible] - [illegible]ACM Goldbridge [illegible] 2 [illegible]

- [illegible]ACM Goldbridge [illegible]

- [illegible] [illegible]

20+ YEARS EXPERIENCE

OEM & ODM

ACCESS CONTROL SYSTEMS ONE STOP SOLUTION PROVIDER

Goldbridge is Top 10 China Manufacture On Alibaba,
Specializes In Provide Kinds Of RFID/NFC Cards, FID Tags, RFID Card Reader, UHF Reader, Access Control System, Electromagnetic Locks, etc Since 1999

- Customized Services
- Qually Assurance
- Fast Delivery
- Best After-Sales Service

OUR FACTORY

- **Access Control and RFID Reader Production Line:**
- Monthly production quantity is up to 50,000pcs , We are Provides OEM&ODM services including product research and development, LOGO printing, customized.etc

- **Electromagnetic lock & Smart Door Lock Production Line :**
- Monthly production quantity is up to 100,000pcs ,
- Our factory is built with modern manufacture environment, facilities, equipment and professional operation technicians.
- Goldbridge Provides OEM&ODM services including product research and development, LOGO printing and product box customized.

- **RFID & NFC Cards & Tags Production Line :**
- RFID Tag, Wristband, Keyfob: 11,000,000pcs (monthly output)
- Four Production Lines For Smart Card, PVC Card, Prelam Sheet: 20,000,000pcs (monthly output)
- Goldbridge Provides OEM&ODM services for LOGO printing, development, customized.

ADVANTAGE

WHY CHOOSE US?

1. **FAST DELIVERY** Faster delivery by air by express. (DHL,UPS or Fedex)
2. **LONG HISTORY** 20 years experience in RFID & Access Control industry
3. **OEM ACCEPTABLE** 20 years OEM&ODM experience for 1000 + VIP client from US and Europe
4. **HIGH QUALITY** Design and manufacture high quality produtcs with 30 R&D; engineers.

APPLICATION

Bus, supermarket,school, government, hospital, factory

CERTIFICATE

Access Control CE | Access Control Rohs | EM Lock EMC Certificate | EM Lokc ROHS Certificate

RFID Card Reader CE | RFID Card Reader Rohs | UHF Reader CE Certifiate | UHF Reader ROHS