[illegible]

[illegible]PVCRFID[illegible]

1.[illegible]
2.[illegible]ID[illegible]
3.[illegible]PVC[illegible]
4.[illegible]

[illegible]PVC[illegible]

MF1K 13.56MHz

T/T [illegible] Paypal [illegible] F D H L UPS...

[illegible]

OEM[illegible]

1.[illegible]
2.[illegible]
3.125KHZ[illegible]13.56MHZ[illegible]868Mhz-915Mhz TK4100[illegible]F08[illegible]3[illegible]

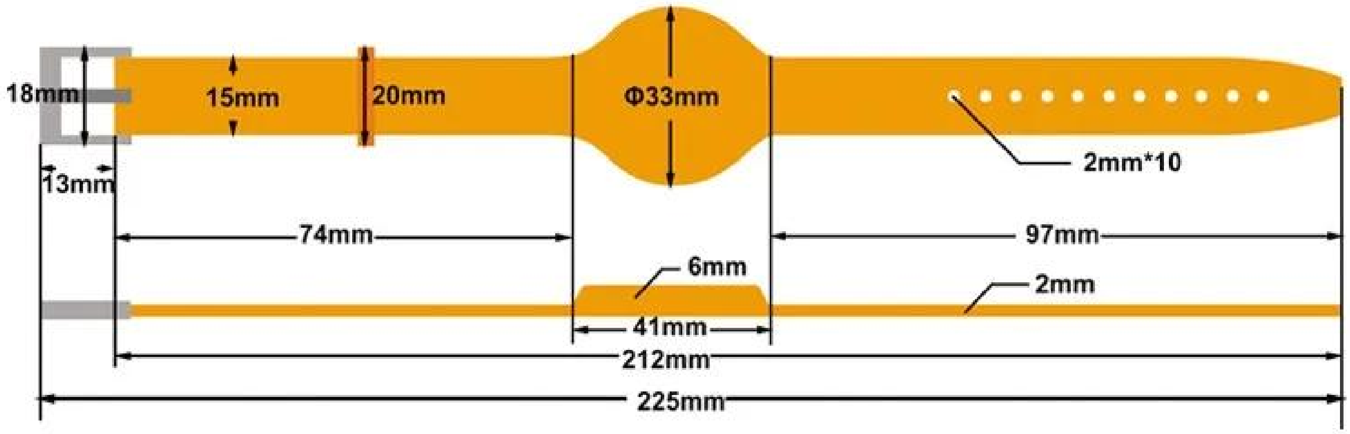

18mm
15mm
20mm
Φ33mm
2mm*10
13mm
74mm
97mm
6mm
2mm
41mm
212mm
225mm

[illegible]RFID[illegible]

- [illegible]
- [illegible]
- [illegible]
- [illegible]
- [illegible]
- [illegible]
- [illegible]
- [illegible]

BAR

APPLICATIONS

Music Concerts

Hospitals

Sports Events

Access tickets

TOP PICKS

ACM-W001

$ 0.15-0.50

ACM-W002/003

$ 0.15-0.50

ACM-W038

$ 0.15-0.50

ACM-W012

$ 0.15-0.50

ACM-W013

$ 0.15-0.50

ACM-W042

$ 0.15-0.50

RFID Silicone Wristband

High Quality Waterproof Custom 125khz Silicone Rfid Wristband

H
F
n
f
c

13.56MHZ T/T

xe DHL UPS.

Product Description

1. It is widely used for company time attendance , door access control , staff or membership management .

2 .Each wristband with a global unique ID number .

3 .Soft silicone material different size can choose

((RFID))
((RFID))

((RFID))
172

Our silicone wristband

1: Cetificate: FDA,SGS,ROHS
2: Material: Food Grade eco silicone material, no bad smell
3: 100%waterproof for silicone and lock
4: High quality surface treatment: smooth feel,dust proof,no sharp edge
5: RFID chip: LF,HF,UHF
6: Custom color,shape and size etc all accepted

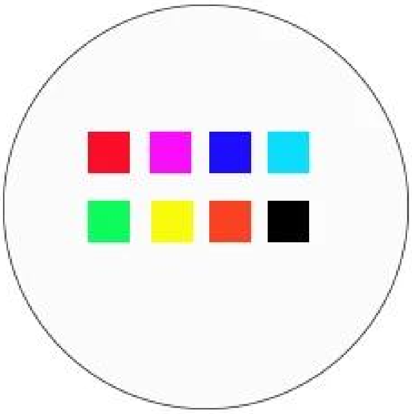

□□□□□

□□
□□□□□□□□□□□□□□□□□□□□□□□□□
□□□□□□□□□□□□□□□□□□□

1□□□□□□□□□□□□24□□□□□□□□□□□
2□□

3□OEM / ODM□□□□□
4□□□□□□□□□□□□□□□□□□□□□□□□□□□□□□□□□□□□
5□□□□□□□□□□□
1□□□□□□□□□□□□□□□□□□□□□□□□□□□□
2□□□□□□□□□□□□□□□□□□□□□
3□□□□□□□□□□□□□□□□□□□□□□□□2□3□□□□□□□□□□□

6□□□□□□□□ □□□□□□□□□□□1□5□□□□□□□□□□7□30□

7□□□□□ □□□□□□□□□□□□□□□□□□□□□□□□□□T / T□□□□□□□□□□□□□□□□□□□□□□□

8□□□□ DHL□FEDEX□TNT□UPS□EMS□SEA□□□□□□□□□□□□AIR□□□

□□□□□

□□□□□□□□□□□□□□□□□□□□□□□□□□□□□□**ACMGoldbridge**□□□□□□□**2**□□□□□□□□□□□□
□□□□□□□ACMGoldbridge□□□□□□□□□□□□□□□□□□
□□□□□□□□□□□□□□□□□□□□□□□□

□□□□□□

Q□1□□□□□□□□□□□□□□□□□
A□□
Q□2□□□□□□□□□□□□□□□□□
A□□□□□□T / T□Paypal□□□□□□□□□□□□□
□□□□□□□□□□□□□□□DHL□FedEx□TNT UPS□□□□□□□□□□□

Q：3：

A：

Q：4：

A：5000：3：7：100,000：7：15：

Q：5：

A： OEM：

Q：6：

：20：RFID： / NFC： / RFID： / RFID：1：