□□□....□□

UHF□□□	□□□□□□□	UHF□□□	□□□□□□□
ACM-9662	17 * 17mm	ACM-9629	22.5 * 22.5mm
ACM-9654	19 * 93mm	ACM-9627	30 * 45mm
ACM-9640	19 * 93mm	ACM-9620	9.7 * 27mm
ACM-9634	44 * 46mm	ACM-9613	12 * 9mm
ACM-9630	44 * 46mm	ACM-9610	10.4 * 44.5mm

00000

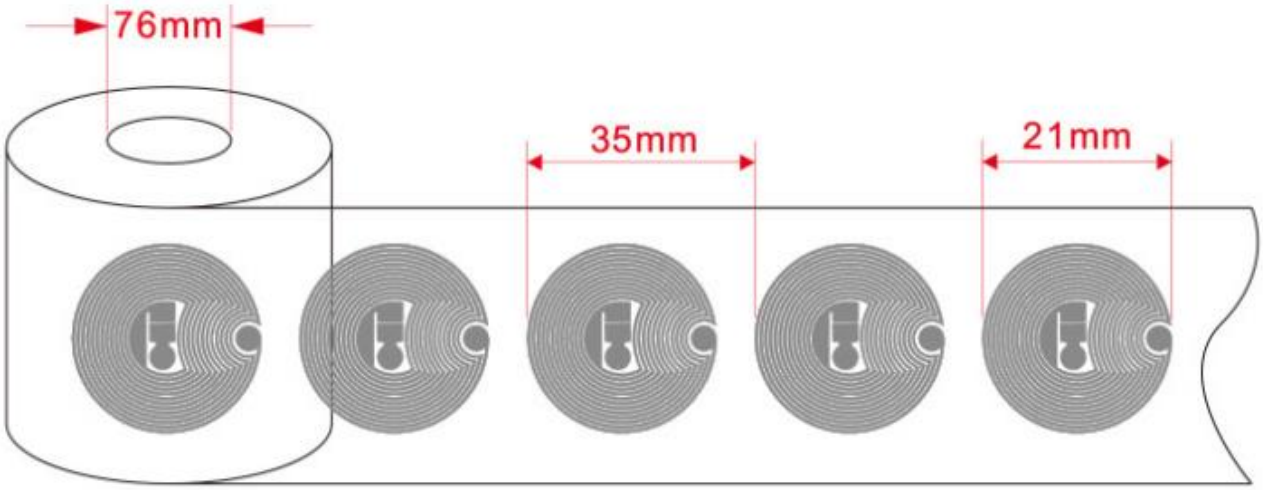
76mm
35mm
21mm

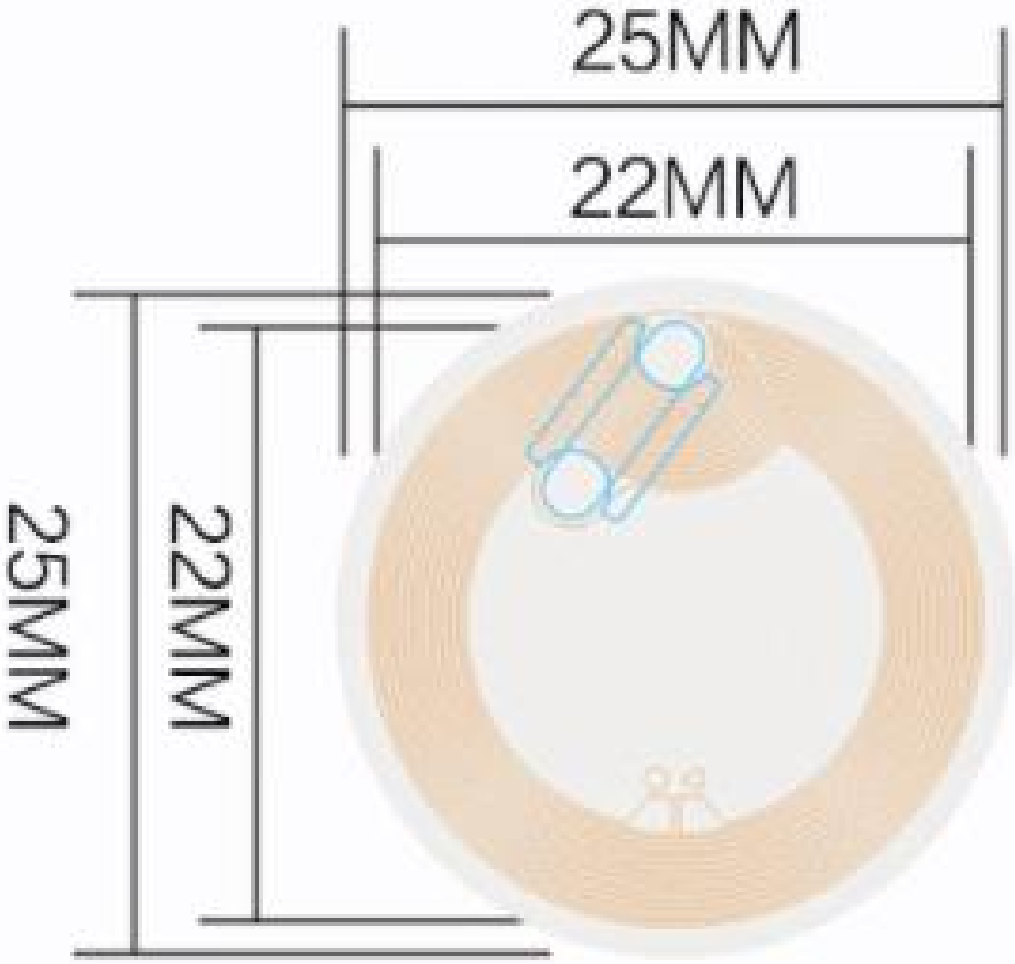
25MM
22MM
25MM
22MM