□□□□

**Wifi□□□□Wiegand 26-34□□□433MHz□□□□

Dc12V 15mA 3m 143*55*2mm

产品图片

1 2
3 4
5 6
7 8
9 0
* #

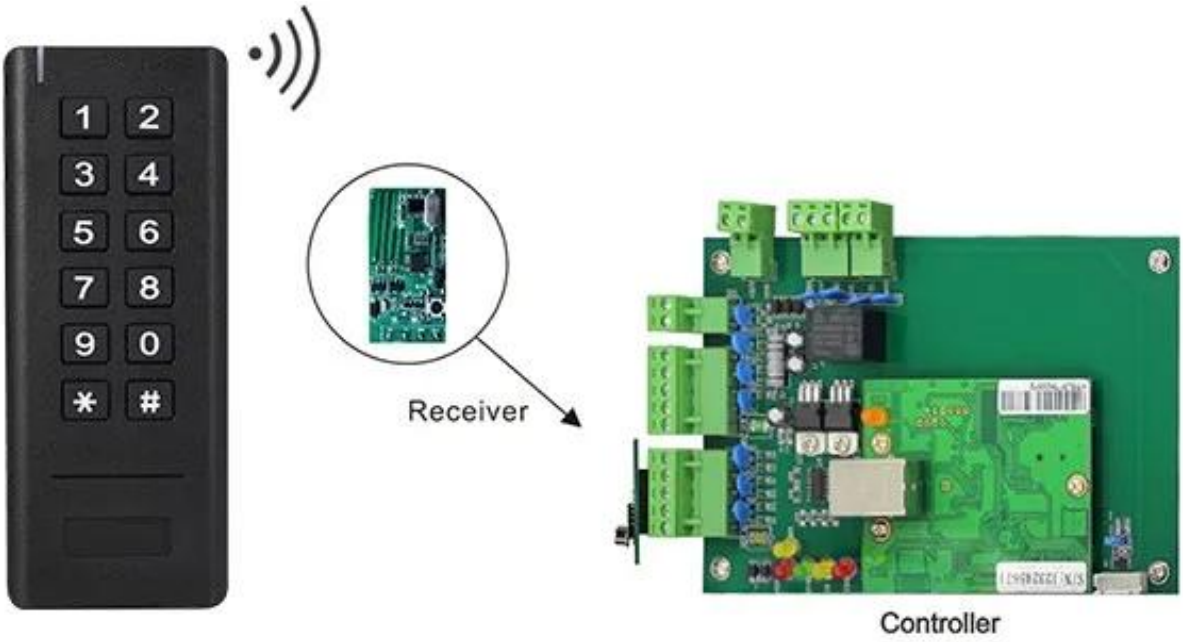

Wireless button
(Optional accessory)

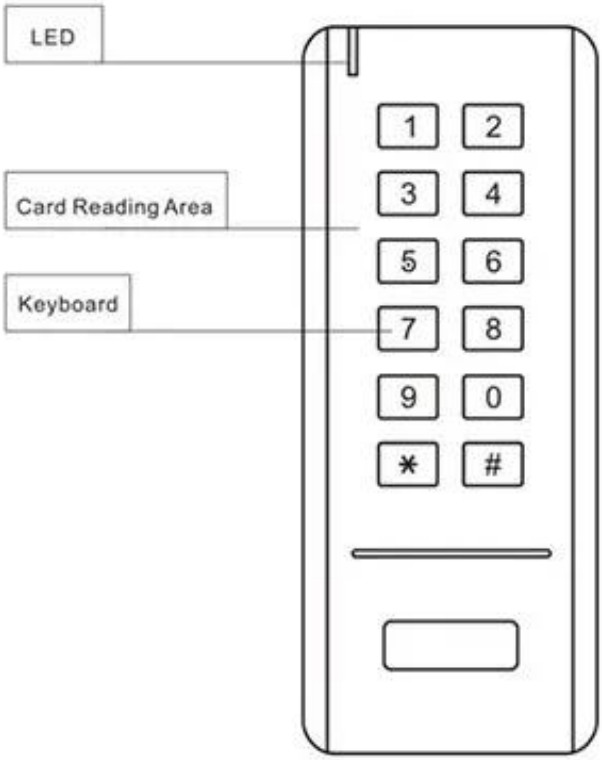

Wireless Keypad Reader

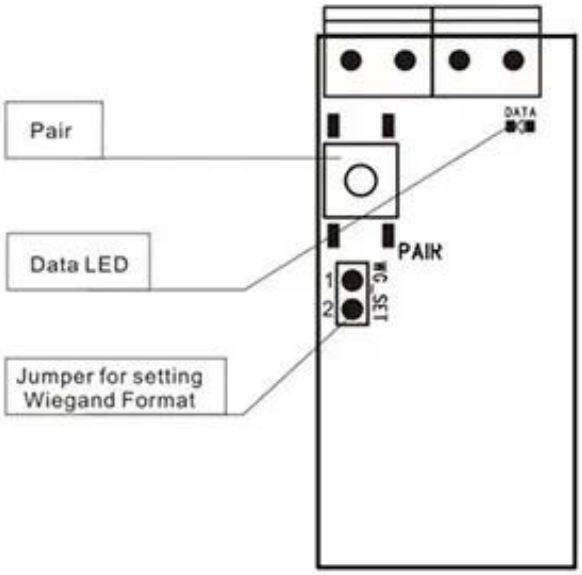

Receiver

Fast installation within 2 minutes

3M sticker for Wireless reader

Rip one side of the sticker

Stick it on the back of the reader

Rip the other side of the sticker

Stick the reader on the door

[illegible]

[illegible]

[illegible]1[illegible]1[illegible]1[illegible]100[illegible]
[illegible]
[illegible]3[illegible]7[illegible]

[illegible]20[illegible]

[illegible]

□□□□

□□□□2000□□□□□□□□RFID□□□□□□□□□□□□1□□□□□□□□□□□□

ACM26X RFID□□□□□□□

125Khz□□□□□□26/34□□□□□□□□
□□□□115mm×75.5mm×16.8mm

ACM26G RFID□□□□□□□

125Khz /13.56Mhz□□□□
□□□□□□26/34 / RS232

KR600E RFID□□□□

125KHz□□ID / 13.56Mhz□□□□□□□□□□□□
□□□□26bit

ACM-EMI-S RFID□□□

125Khz EM□□□□□
□□□86 * 54mm

ACM-MF1 RFID□□□□

MF1 1K□□□□□

ACM-ABS003 RFID□□□□

□

125Khz EM / 13.56Mhz / UHF□□□□□□□
□□□□□□□□□□□□□□□□□□□□□□□□

□□□□

-□□□□□□□□□□□□□□□□□□□□□□□□□□□□□□□□□□□□□ACMGoldbridge□□□□□□□□□□□2□□□□□□□□□□□□□□
-□□□□□□□□ACM Goldbridge□□□□□□□□□□□□□□□□□□□□□□□□
-□□□□□□□□□□□□□□□□□□□□□□□□□□□□

□□□□□□□□

1□□□□□□□□□24□□□□□□□□□□□□□
2□□□□□□□□□□□□□□□□□□□

7[illegible]T / T[illegible]Paypal[illegible]
8[illegible]DHL[illegible]FEDERAL EXPRESS[illegible]TNT[illegible]UPS[illegible]EMS[illegible]SEA[illegible]AIR[illegible]

[illegible]

Q[illegible]1.[illegible]
A[illegible]

Q[illegible]2.[illegible]
A[illegible]T / T[illegible]Paypal[illegible]
[illegible]DHL[illegible]TNT UPS[illegible]

Q[illegible]3.[illegible]
A[illegible]

Q[illegible]4[illegible]
A[illegible]5000pcs[illegible]3-7[illegible]100,000pcs[illegible]7-15[illegible]

Q[illegible]5[illegible]
A[illegible] OEM[illegible]

Q[illegible]6[illegible]
[illegible]RFID[illegible]/ NFC[illegible]/ RFID[illegible]/ RFID[illegible]RFID[illegible]20[illegible]1[illegible]