□□ □□

WG26 TCP / IP □□□□□ RFID TCP / IP 1 □□ □□□ □□ □□□

□□□ □□ □□□ □□□□ □□□□ □□□ □□□ □□ □ □□ □□□□□ □□□ □□□□□ □□□ □ □□□□□. □□□ □□□ □ Access □□□□□□ □ □□ PC□□ □ □ □□ □□□□ □□□□□□□ □.

□
□
□
□
□
□

[illegible]1[illegible]TPC/IP1[illegible]/2[illegible]/4[illegible]26

□
□
□

TCP/IP:

(

,

)

□□□

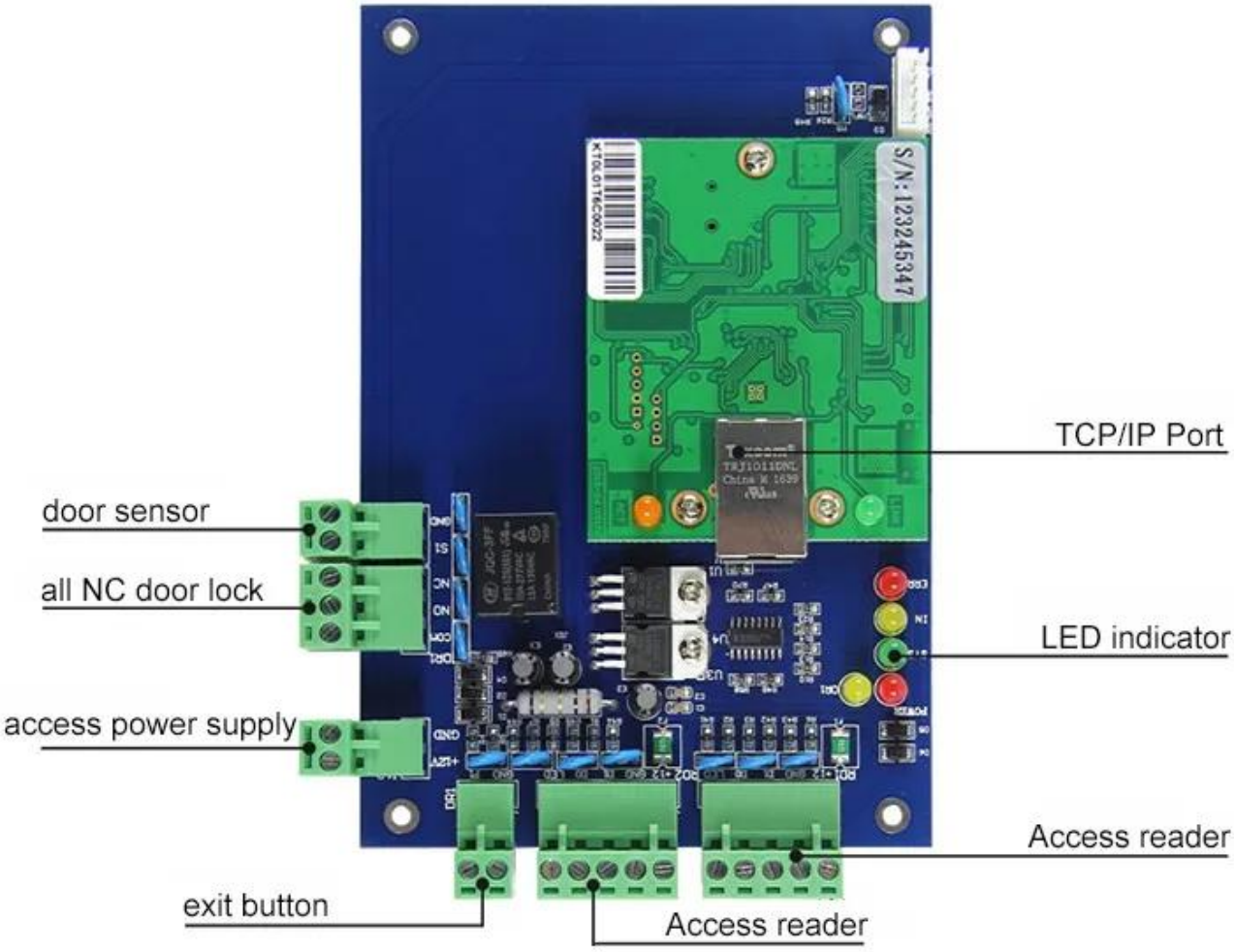
TCP/IP Port
door sensor
all NC door lock
LED indicator
access power supply
Access reader
exit button
Access reader

Signal Door Acess Controller Wiring Diagram（TCP/IP Communication）

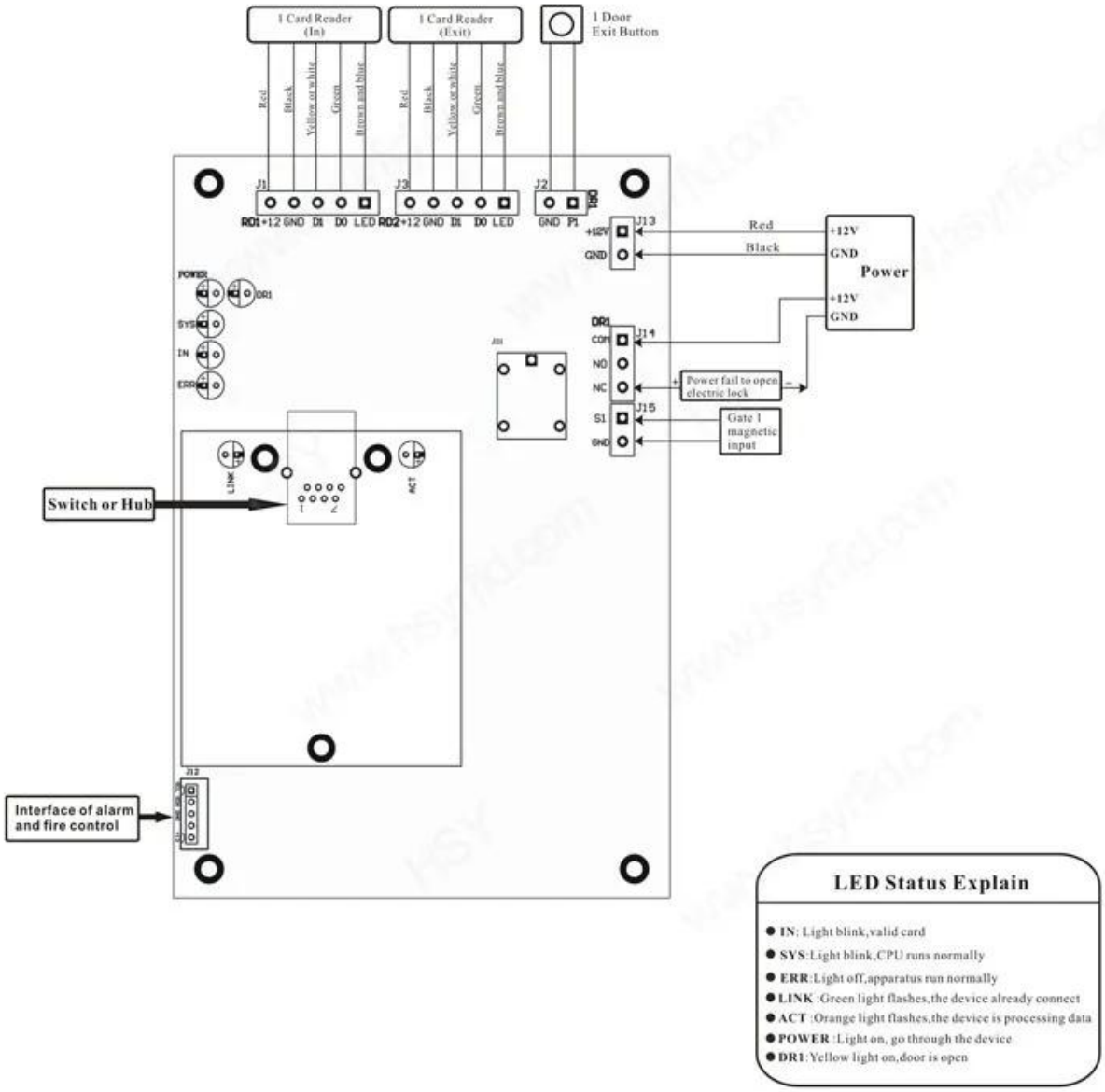

LED Status Explain

- **IN**: Light blink,valid card
- **SYS**:Light blink,CPU runs normally
- **ERR**:Light off,apparatus run normally
- **LINK** :Green light flashes,the device already connect
- **ACT** :Orange light flashes,the device is processing data
- **POWER** :Light on, go through the device
- **DR1**:Yellow light on,door is open

Scope of Application

Company

Hospital

Hotels

Logistics

Port

Financial

Government

Factory

Aviation

School

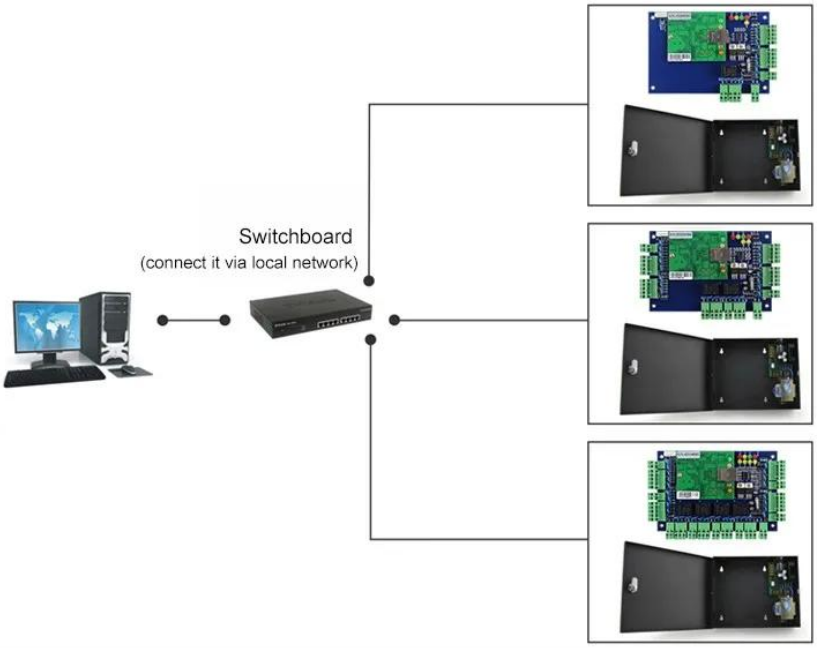

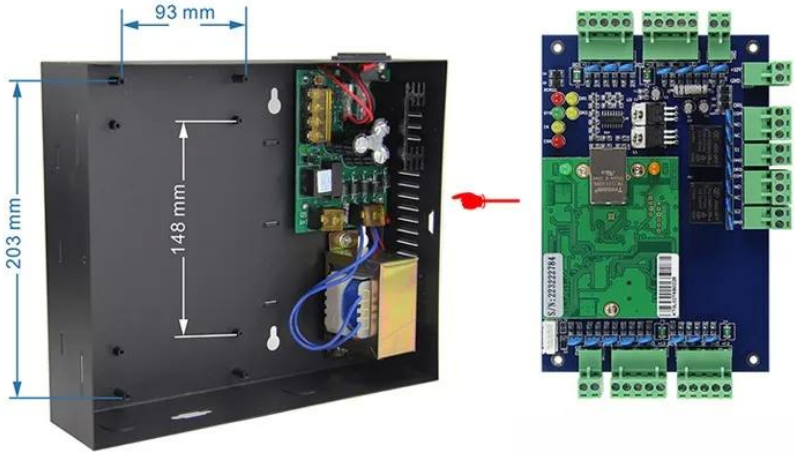

Kindly remind:

All network control board must configure with access power supply.
1 board for 1 power supply

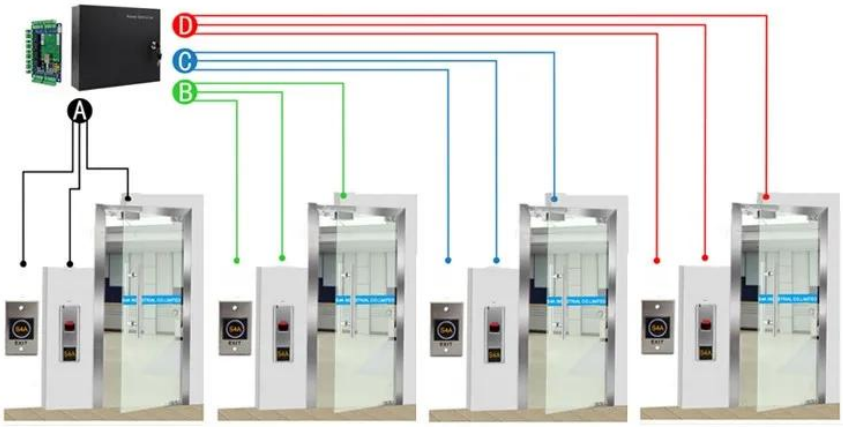

ACM-WEG04

Four doors 1 way: Control 4doors (Enter by Swipe cards and Exit by Push button)

□□ □ □□

□□ □□□ □□□ □□□ □□□ □□ □ □□□ □□□ □□ □□□□□.
□□ □□□ □□ □□□ □□□ □□ □□□□□ □□□□□.
□□□ □□ □□□ □□□ □□ □□□ □□□□.

□□ □□ (□□□ □□ □□)

□□□ 2000 □□□ □□□□ RFID □□□ □□ □□□ □ □□□□□. □□□ □□ □□ □□□ □□ □□□ □□ □□□ □□ □ □□ □□□, □□□ □□□ □□ □□□□□ □□ □□ / □□ □□□ □□□□ □□□□ □□ □□□□. □□□ □□□ CO, FTA, □□ F, □□ E ... □ □□□ □ □□ □□□□ □□ □□□ □□□□ □□ □ □ □□□□. □□□ □□□ □□ □□□ □□ □□. EXW, FOB, FCT, CIF, CFR ... □□ □□□ □□□ □□ □□□□. □□□ □□ □ □□□ □□ □□□ □□□ □□□□ □ □ □□□□.

□□□ 20 □□ □□□ □□ □□ □□ □□ □□□ □□ □□ □□ □□□□ □□□ □□ □□□ □□□□ □□□ □□□□ □□□□□! □□□, □□□ □□ □□ □□□ □□, □ □ □□ c !!
□□□ □□□ □□□□ □□□ □□□□ □□□□ □□□□ □□□ □□□□□ □□□□ □□□□.

□□ □□

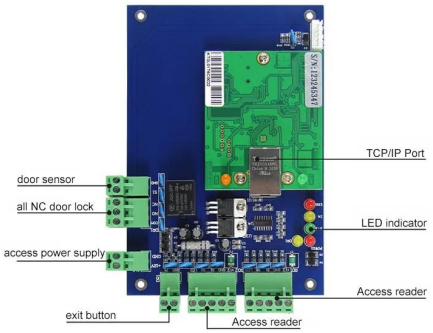

ACM-WEG01

1 □□ □□ □□ □ □ □□□□.

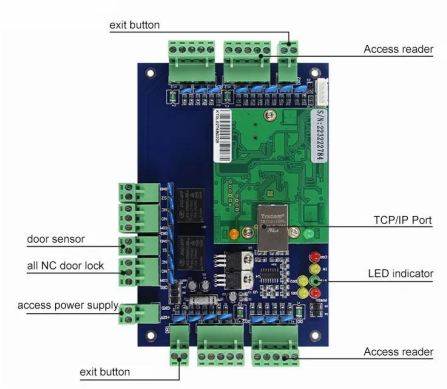

ACM-WEG02

2 □□ □□ □□ □ □ □□□□.

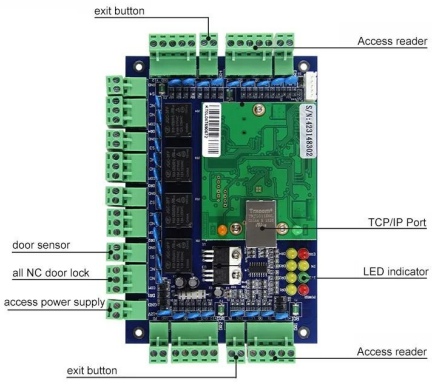

ACM-WEG04

□□□ 4 □□ □□ □□ □ □ □□□□.

You May Like

ACM-K2A / B

LED□ □□ □□ □ Realese □□ □□ □□

ACM-Y180

□□ □□ □□□□ □□ □□ (180kg)

ACM-Y806-5A

□□□ □□□□□ □□ □□ □□ 5A

ACM225

□□ □□□ RFID □□□ □□ 12khz

ACM-210

□□ □□ RFID Wiegand □□□ □□

ACM26X

125Khz EM □□ RFID □□ □□ : 115mm × 75.5mm × 16.8mm

□□□ □□□

1, □□ 24 □□ □□□ □□
2, □□ □□ □□ □ □□ □□, □□□ □ □□□□ □□□ □□□□□ □□□ □□
3, □□□ OEM / ODM
4, □□□, fashin desing, □□□□ □ □□□□□ □□, □□ □□ □□
5, □□ □ □□□ :
1), □□ □□□ □□□□ □□ □□ □ □□ □□
2), □□ □□□ □□ □□ □ □□□□□
3), □□□ □□ □□□ 2-3 □ □□ □□ □□ □□□ □□ □□□□
6, □□ □□ : □ 1 ~ 5 □ □□ □□, 7 ~ 30 □ □□ □□
7, □□ : □□ □□ □□ : T / T, □□□ □□□, □□□,
8, □□ : □□□ DHL, □□□ □□□□□, TNT, UPS, EMS, □□□ □□□ □□□□ □ □□□ □□□ □□ □□□ □□□□, □□□ □□ □□□ □□□ □□ □□□□□ □□□ □ □□□ □.

□□□□ □□

Q : 1. □□□ □□□?
: □□□ □□ □□□ □□□ □□ □□□□. □□ □□ □□ □□ □ □□ □□ □□□ □□□ □□□ □□□ □□ □□□ □□□□□.

Q : 2. □□ □ □□?
: □□ □□ □ T / T, □□□, □□□ □□□.
□□□ □□, □□ □□ □□□□□ (DHL, FedEx, TNT UPS □)□ □□□ □ □□□□.

Q : 3. □□□ □□□ □□?
: □□□ □□ □□□ □□, □□ □□□ □□.

Q : 4. □□□ □□□ □□ □□ □ □□□□?
: □□□ □□ □□□□□. 5000pcs□□□ □□□□□ 3-7 □ □ 100,000pcs□□□ 7-15 □

Q : 5. □□□ □□□ □□□ □□□ □□□ □ □ □□□□?
: □□ □□ □□, □□□□ □□, □□, □□ □ □□. OEM □□□ □□ □□□□□.

Q : 6. □□□ □□ □□ □□ □□?
□□□ RFID □□ / NFC □□ / RFID keybod / RFID □□, RFID □□ □ □□□□ 20 □ □□ □□□ □□ □□□ □□ □ □□ □□ □ □□□□ □.