□□:

□□□ □□□ □□□ □□□ □□□ □□ □□ □□□□□ □□□ □□□ □□□ □□□□ □□□ □□□□.

□□□ NO □□ NC □□□ □□□□ LED□ □□□, Static LED□ □□, □□□ LED□ □□□□□□.

□□	86 x 86 x 18mm
□□ □□	DC9-12V
□□ □□	<600mA
□□ □□	-30 ° C ~ 60 ° C
□□ □□	20 % -80 %
□□	82g

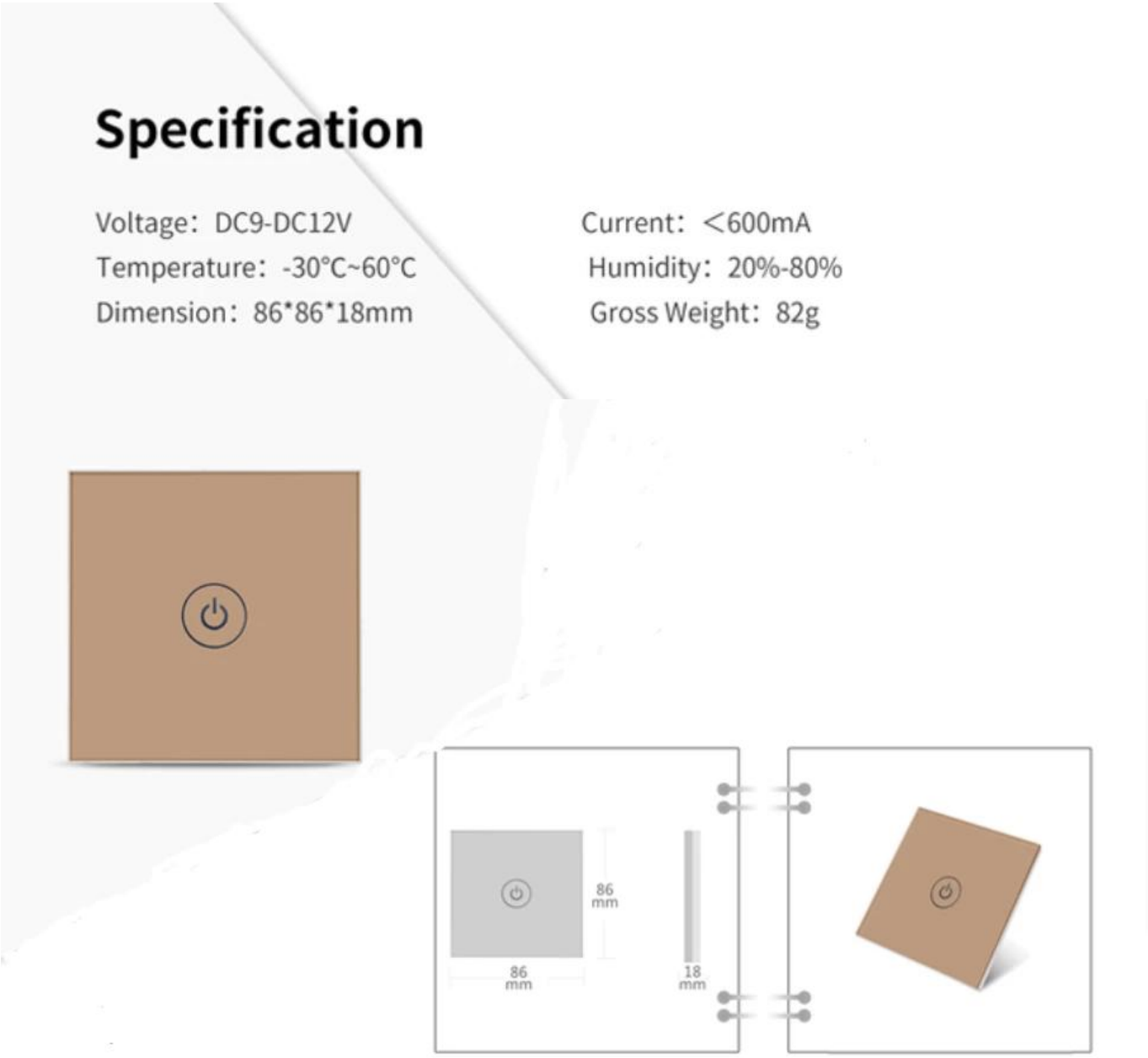

Description

This product is a capacitive touch sensitive door access switch, with automatic environment temperature and humidity Adaptability, not affected by weather change sensitivity and stability. Output when touching Normally open or normally closed switch signal, indicator light display： green in standby, touch The light is red.

Dimensions(mm)

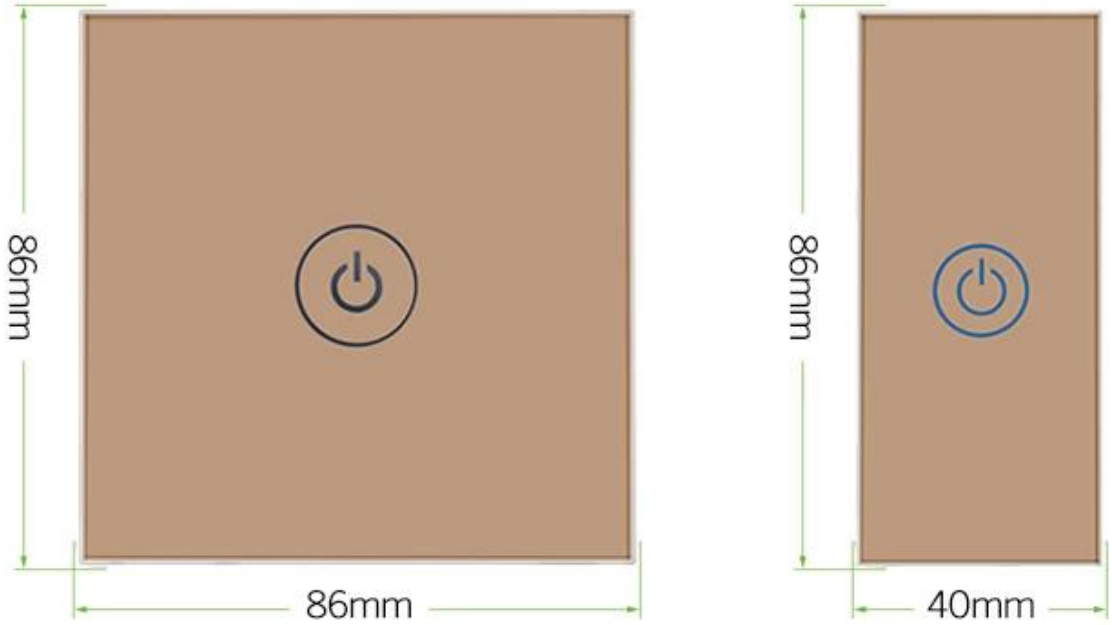

Common power supply diagram:

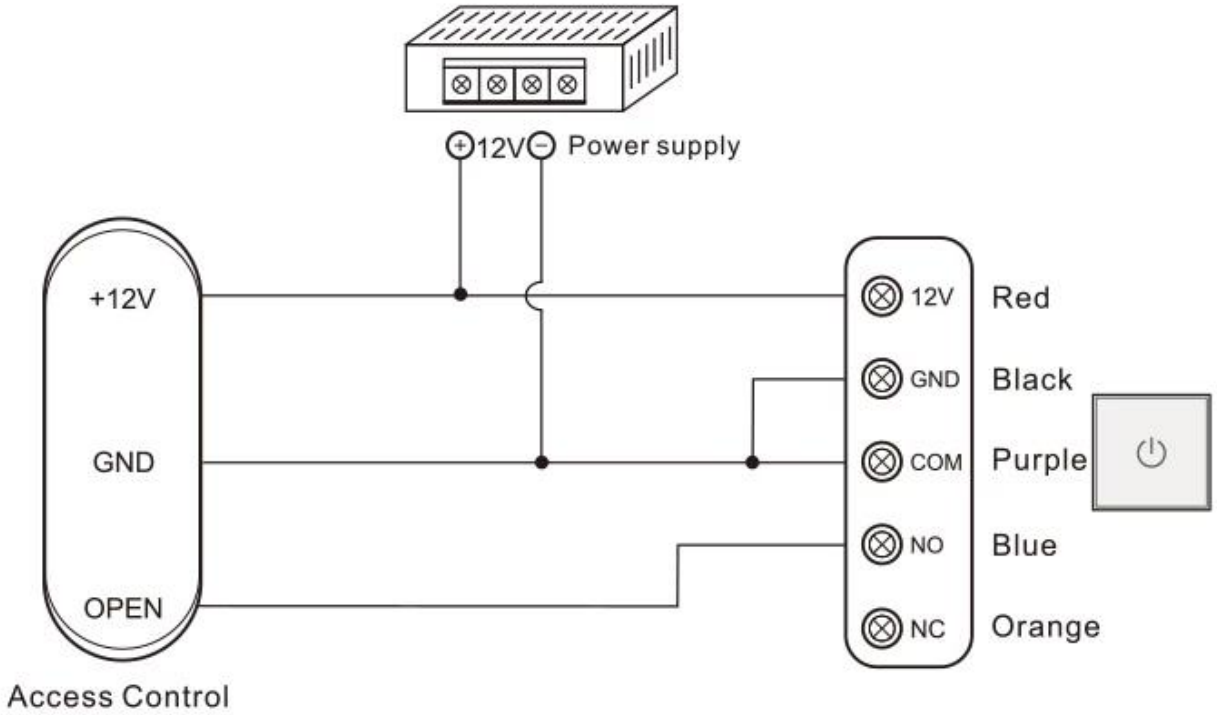

Special power supply diagram:

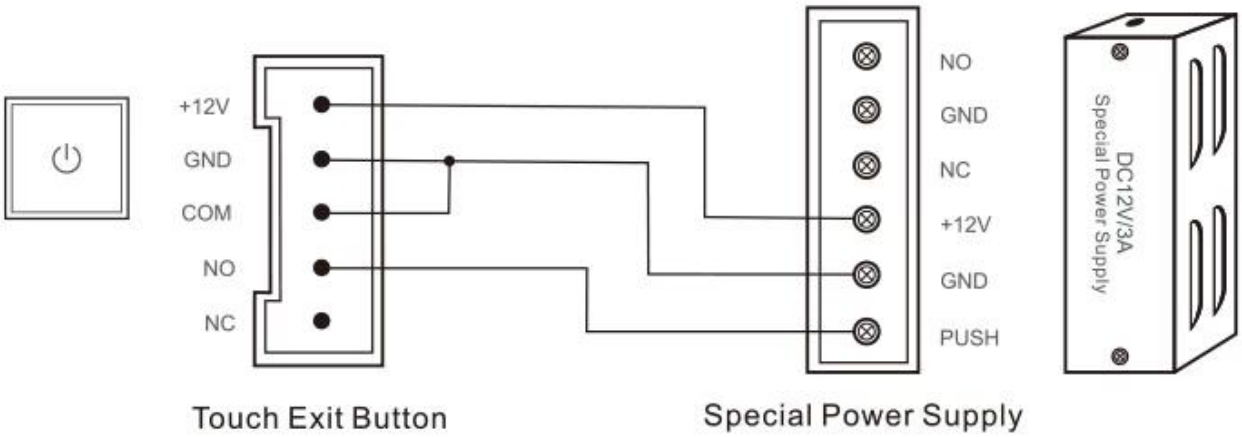

[illegible]

[illegible]

□□□ □□□□□□□.

No Touch
EXIT

EXIT

No touch Door Realese Exit □□
K2B : 86 * 86mm
No touch Door Realese Exit □□
K9A : 115 * 40mm
□□ □□ □□, (□□□□□ □□, NO / NC) K5B :
86 * 86mm

□□ □□ □□, (□□, □□□□, NO), K4B : 86 * 86mm
□□□□□ □□□ □□ □□□ Kirsite. K14B : 86 * 86mm
□□□□□ □□□ PUSH □□ □□ □□; K815B : 86 * 86mm

□□□ □□□

1, □□ □□□ 24 □□ □□□ □□□□□
2, □□ □□□□ □ □□ □□, □ □□□ □ □□ □□□ □□□□□.
3, OEM / ODM □□
4, □□□, fashin □□□, □□□□□ □□□□□ □□, □□ □□ □□
5, □□ □ □□□ :
1), □□ □□□ □□□□ □□ □□□ □□□□ □□□□□□□
2), □□ □□□ □□□□ □□ □ □□ □ □□□□
3), □□□ □□ □□□ □□□ □□□ □□ □□□□ □□ □□ 2-3 □ □□□ □□□□.
6, □□ □□ : □□ □□□ □ 1 ~ 5 □, □□ □□□ □ 7 ~ 30 □
7, □□ : □□□ □□ □□□ □□ □ □ □□□□ : T / T, Western Union, Paypal
8, □□ : □□□ DHL, FEDEX, TNT, UPS, EMS, SEA□ □□□ □ AIR□ □□□ □□ □□□ □□ □□□ □□□ □□□□ □□□ □□ □□□□.

□□□□ □□

Q : 1. □□□ □□□ □ □□□□?
A : □□□□ □□ □□□ □□□□□□. □□ □□ □□□ □ □□ □□□ □□ □□□□□□. □□□ □□□□ □□□ □ □□ □□□ □□ □ □□□□.

Q : 2. □□ □ □□□ □□□□□?
A : T / T, Paypal, □□ □□.
□□□ □□, □□ □□ □□□□□ (DHL, FedEx, TNT UPS □)□ □□□ □ □□□□.

Q : 3. □□□ □□□□ □□ □□□ □□□ □□ □ □□□□?
A : □□□ □□□ □□ □ □□ □□ □ □□ □□□ □□□□ □□ □ □□□□□□.

Q : 4. □□□ □□ □□□ □□ □ □□□□?
A : □□□ □□ □□□□. □□□□□ 5000 □□□ □□ 3-7 □, 100,000 □□□ □□ 7-15 □

Q : 5. □□□ □□□ □□□ □□□ □□□ □ □ □□□□?
A : □□, □□, □□ □ □□□ □□□□ □□ □□ □□□ □□□ □□□□□. OEM □□□ □□□□□.

Q : 6. □□□ □□ □□□□□ □□□ □□□□□?
□□□ 20 □ □□ □□□□ RFID □□ / NFC □□ / RFID □□□ / RFID □□, RFID □□ □ □□□ □□ □□□ □□ □□□□ □ □□□□□.