□□ □□

□□□ □□ **zk** □□□ □□ □□□ □□□□ □□ □□ □□□
□□□ □□ □ □□ □□

. 4□□ □□□, □□□□, □□□□, □□□□□□, □□□□□□□□□
500□□ □□□, 8□□ □□ □□ □□

□□ □□□□	□□□□ □□
□□ □□	500
□□□ □□	500
□□□□	RS232/485, TCP/IP, USB □□□
□□□ □□ □□□□□	□□ □□ □□ □□, □□ □□, □□ □□, □□, □□□
Wiegand □□	□□□
□□□ □□	13.56Mhz
□□ □□ □□	12V DC
□□ □□	0°C-45°C
□□□□ □□	□□□□ 10.0
□ □□	0.65kgs
□□(W*H*D)mm	88*88*40mm(□□×□□×□□)

□□

1. □□□ □□□□ □□□ □□, □□□ □□, □□ □□ □ □□ □□□ □□ □□□ □ □□□□.
2. □□ □□□ □□, □□ □□, 4□□ □□ □□ □□ □□□ □□

3.Fingerprint&ID □□□ □□□ □□, □□□ V10.0 □□□□ □□, □□ □□□;

4. □□□ □□ □□ □□ Infared □□ □□□;
5.□□□ □□□ □□ □□, □□ □□, □□ □□□;
6. □□ □□ □□□□□ □□, □□ □ □□□ □□ □□□ □□ 500□□□ □□□□□.
7. □□□□ □□ □□□ □□□ □□□ □□□ □□□□ □□□□.
8. □□ □□ □□□, □□□ □□□ □□□□□.

□□ □

ACM-851 □□□ □□ □□ □□□□□ □□ Rfid □□ □□□ □□ □□ □□□ □□ □□□

□ □□ □□ □□

1. □□

2. □□□□

3. □□

4.□□□□□□

□□ □ □□

Finger 10.0 □□□□□ □□□□ ACM-851 □□ □□□ □□ □□, □□□ □□ □□ □□ □□, 86 □□ □□, □□ □□□ □□ □□, □□□□ □□ □□, □□□□ □□ □□ □□□ □□□□□ □ □□□□ □□□ □□ □□□□ □□ □□□□□.

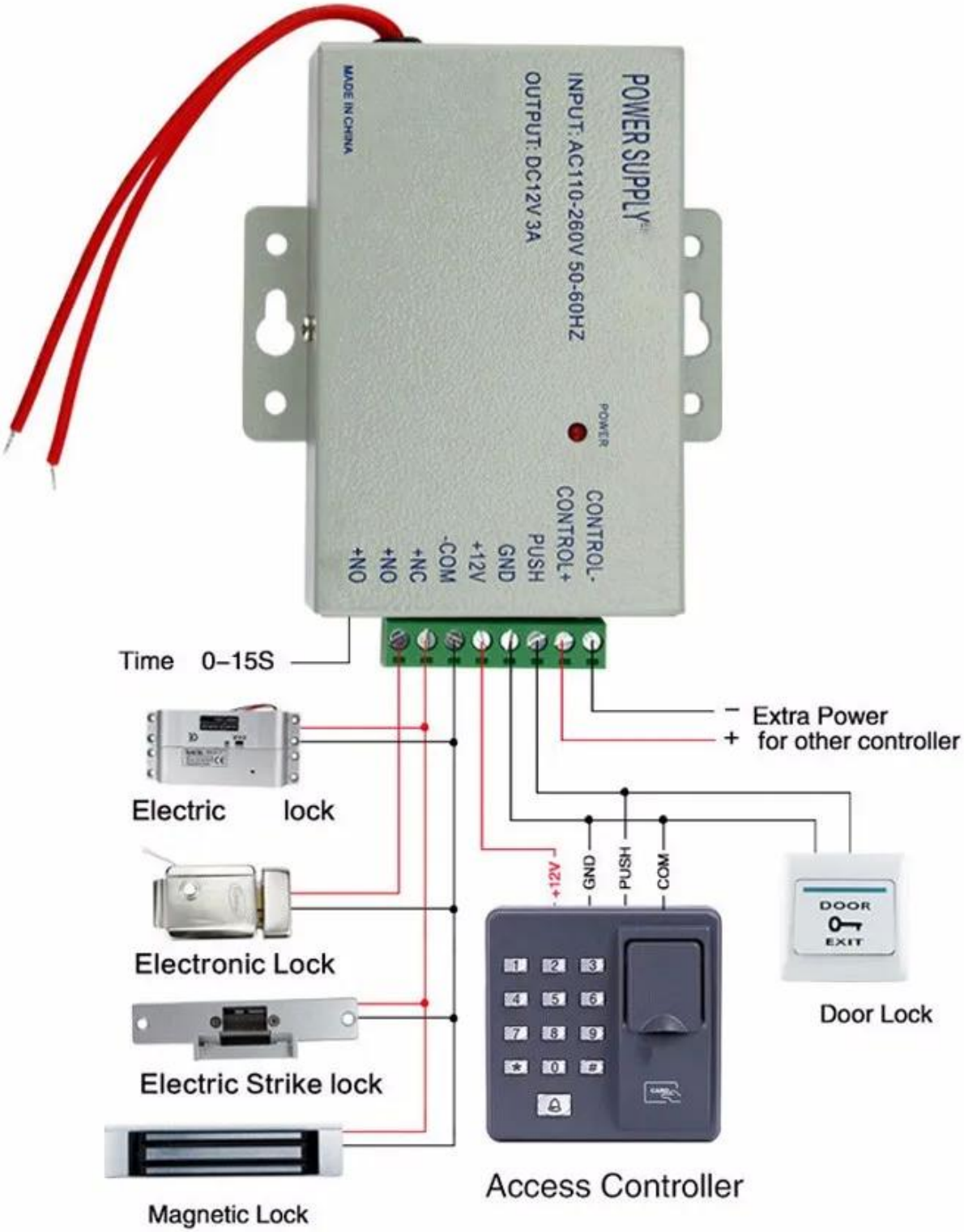
POWER SUPPLY
INPUT: AC110-260V 50-60HZ
OUTPUT: DC12V 3A
MADE IN CHINA
POWER
CONTROL-
CONTROL+
PUSH
GND
+12V
-COM
+NC
+NO
+NO
Time 0–15S
− Extra Power
+ for other controller
Electric lock
Electronic Lock
Electric Strike lock
Magnetic Lock
+12V
GND
PUSH
COM
Access Controller
DOOR
EXIT
Door Lock

Install the machine

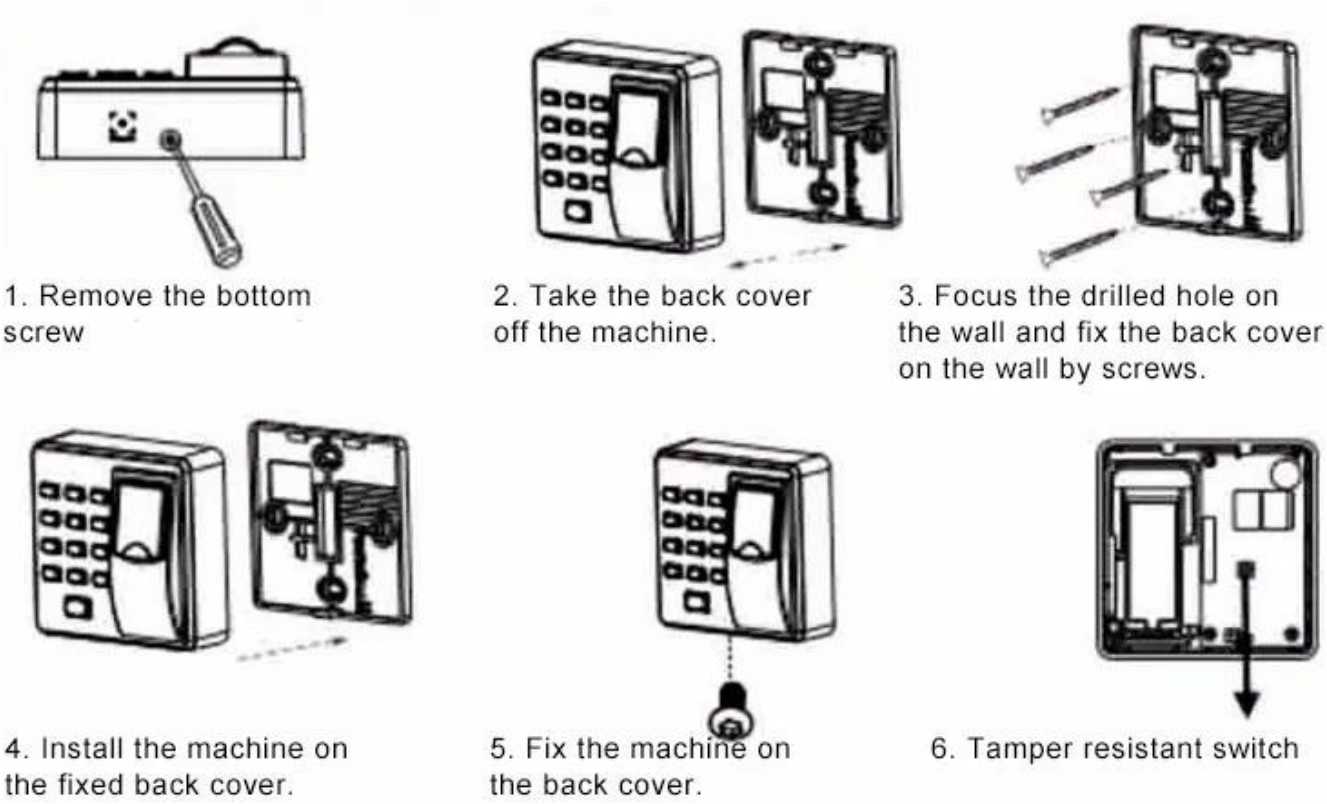

□□ □ □□

□□ □□
□□□ DHL, FEDEX, TNT, UPS, EMS, SEA □ By AIR□ □□□ □□ □□□ □□ □□□□.

□□□ □□ □□□ □□□□□ □□□ □ □□□□.

□□
□□□ □□ □□ □□: □□ □ 1unit, □□ □ 24pcs,
□□ □□: □□□□ 6.5KG□□□. □□□ □□□ 49 X 29 X 27cm□□□.

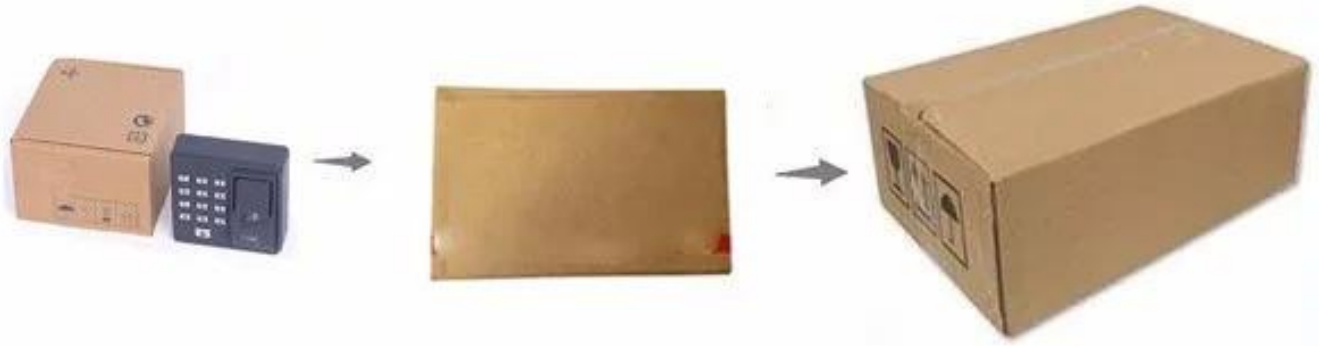

□□□□□ □□□ □□□□ 3□ □□ □□ □□□ □□□□!!!

□□ □□

Access Control System

Complete Door Access Control Solution Provider

Hot Selling Equipments

BEST SELLERS

Standalone Fingerprint & RFID Outdoor Waterproof Access Controller

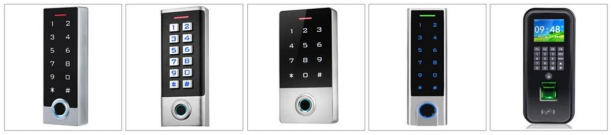

ACM-209E | ACM-209V | ACM-209H | ACM-210E | ACM-9800

ACM-209D | ACM-209F | ACM-851 | ACM-TM07 Face Recognition | ACM-TM05 Face Recognition

Standalone Waterproof Metal RFID Access Control

ACM-211A | ACM-212A | ACM-208A | ACM-210A | ACM-208B

ACM-208C | ACM-A65 | ACM-A55 | ACM-210F | ACM-209A

Standalone Waterproof Touch Screen /Keypad RFID Access Controller

ACM-230K | ACM-230T | ACM-223 | ACM-225 | ACM-227

ACM-226 | ACM-301C | ACM-301D | ACM-212 | ACM-212C

Touch Screen Standalone Waterproof Metal RFID Access Controller

ACM-A40 | ACM-A50 | ACM-A10 | ACM-A20 | ACM-A30

ACM-A60 | ACM-A80 | ACM-A88 | ACM-A21 | ACM-A51

1. □□ □□□ 24□□ □□□ □□□ □□□□.

2. □□□□ □□□ □ □□□, □□□ □□□□ □ □□ □□□ □□□□ □□
3.OEM/ODM □□
4. □□□, fashin desing, □□□ & □□□□, □□ □□□□
5.□□ □ □□□:
A: □□ □□□ □□□□ □□ □□□ □□□ □□ □□□ □□□ □□□□.
B: □□ □□□ □□ □□ □ □□□ □□□□.
C: □□□ □□□ □□ □□□□ □□ □□ □□□ □□ □□□□ 2-3□ □□□ □□□□.
6. □□ □□ : □□ □□ □ □ 1~5□, □□ □□ □ □ 7~30□ □□
7. □□: T/T, □□□ □□□, □□□, □□ □□ □□□ □□ □□□ □□ □□□ □ □□□□.
8.Shipping: □□□ DHL, FEDEX, TNT, UPS, EMS, SEA □ AIR□ □□□□ □□□ □□ □□□ □□ □□□ □□□ □□ □□□□ □□□ □□ □□□□.

□□ □□ - ACM Goldbridge□ □□ □□□ □□ 2□ □□□ □□□□□.

- □□□ ACM Goldbridge□ □□ □ □□ □□□ □□□□□.

- □□□ □□□ □□□ □□□ □□□□□□.

20+ YEARS EXPERIENCE

OEM & ODM

ACCESS CONTROL SYSTEMS ONE STOP SOLUTION PROVIDER

Goldbridge is Top 10 China Manufacture On Alibaba,
Specializes In Provide Kinds Of RFID/NFC Cards, FID Tags, RFID Card Reader, UHF Reader, Access Control System, Electromagnetic Locks, etc Since 1999

- Customized Services
- Qually Assurance
- Fast Delivery
- Best After-Sales Service

OUR FACTORY

- **Access Control and RFID Reader Production Line:**
- Monthly production quantity is up to 50,000pcs , We are Provides OEM&ODM services including product research and development, LOGO printing, customized.etc

- **Electromagnetic lock & Smart Door Lock Production Line :**
- Monthly production quantity is up to 100,000pcs ,
- Our factory is built with modern manufacture environment, facilities, equipment and professional operation technicians.
- Goldbridge Provides OEM&ODM services including product research and development, LOGO printing and product box customized.

- **RFID & NFC Cards & Tags Production Line :**
- RFID Tag, Wristband, Keyfob: 11,000,000pcs (monthly output)
- Four Production Lines For Smart Card, PVC Card, Prelam Sheet: 20,000,000pcs (monthly output)
- Goldbridge Provides OEM&ODM services for LOGO printing, development, customized.

ADVANTAGE

WHY CHOOSE US?

1. **FAST DELIVERY** Faster delivery by air by express. (DHL,UPS or Fedex)
2. **LONG HISTORY** 20 years experience in RFID & Access Control industry
3. **OEM ACCEPTABLE** 20 years OEM&ODM experience for 1000 + VIP client from US and Europe
4. **HIGH QUALITY** Design and manufacture high quality produtcs with 30 R&D; engineers.

APPLICATION

Bus, supermarket,school, government, hospital, factory

CERTIFICATE

Access Control CE | Access Control Rohs | EM Lock EMC Certificate | EM Lokc ROHS Certificate

RFID Card Reader CE | RFID Card Reader Rohs | UHF Reader CE Certifiate | UHF Reader ROHS