□□ □

Uninterrupted
Power Supply Control
AC POWER
DC OUTPUT
CHARGEING
INPUT: AC100-260V/50-60HZ
OUTPUT: DC 12V 5A
CAUTION
ELECTRIC SHOCK
DANGER
indoor use only.
equipment should be protected.
caution risk of electric shock.
children and unprofessional
are not allowed to open.

LED □□□□ □□ 12V 5A □□ □□□ □□ □□ □□ □□

5A □□ □□ □□ □□

□□ □ □□ □□ □ □□ □□ □□.

□ □□ □□ □□□ □□□ □□, □□□ □□□ □□ □□, □□ □□ □□□

□□ □□ □□□ □□□□□.

□
□
□
□
□
□

2

.212*172*7mm

11V-24V

5W
12V;NO/NC-15

□□ □□□

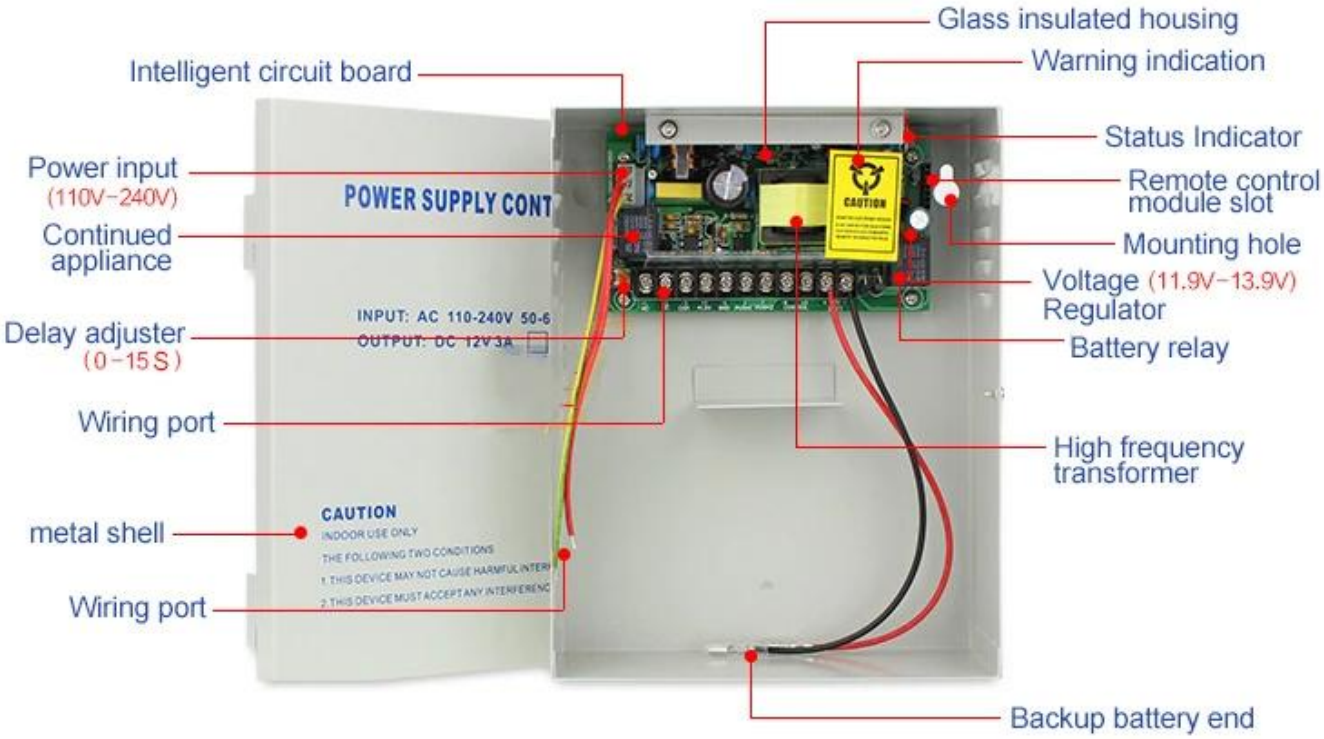

External terminal

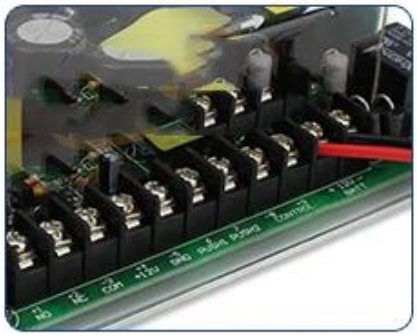

External wiring port for easy wiring, easy to use, save installation time

Remote control module slot

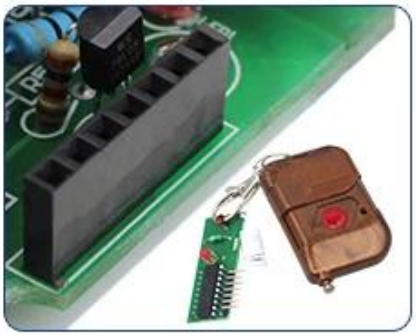

The access control power board slot design can insert the remote control module into the slot and unlock it with one button.

For strong current

Ordinary access control power supply provides 1.5-1.8A current output, 208K 5A access control power supply provides 5A current output

□□□□□□

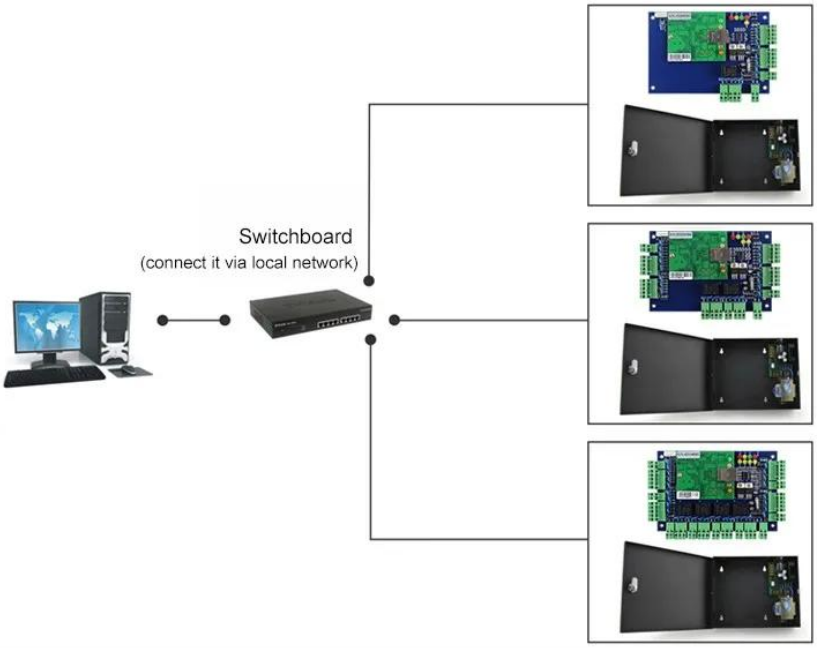

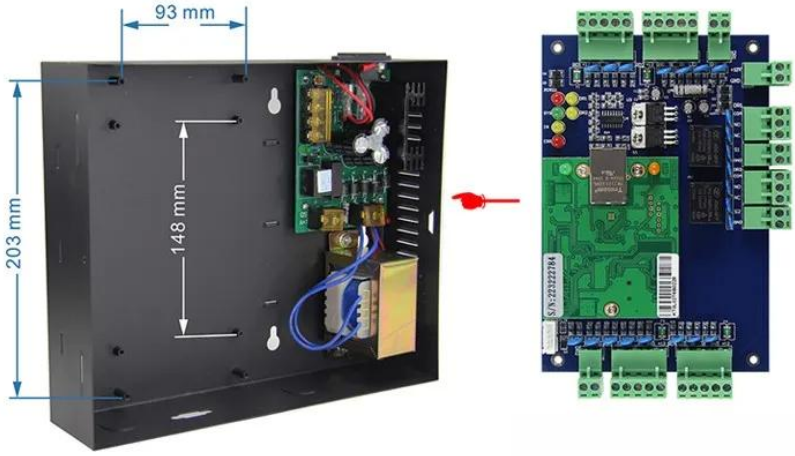

Kindly remind:

All network control board must configure with access power supply.
1 board for 1 power supply

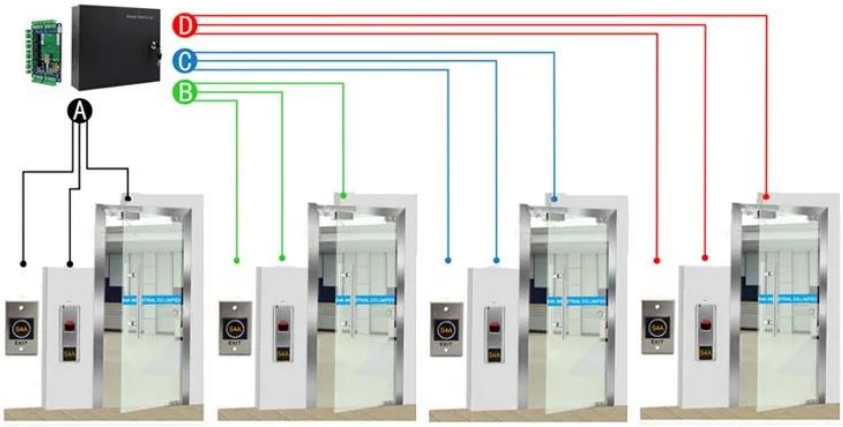

ACM-WEG04

Four doors 1 way: Control 4doors (Enter by Swipe cards and Exit by Push button)

□□ □ □□

□□□ □□□ □□□ □□□ □□□ □□ □ □□□ □□ □□□ □□□□□.
□□ □□□ □□□ □□□ □□□ □□□ □□□ □□□□ □□□ □□□□.
□□□ □□□ □ □□ □□ □□□ □□□ □□□□.

□□ □□(□□ □□ □□□)

□□□ 2000□ □□ □□□□ RFID □□□ □□ □□□ □ □□□□□.
□□□ □□ □□ □□□ □□ □□□ □□ □□□ □□ □ □□ □□□ □□
□□□□□ □□ □□/□□ □□□ □□□ □□□ □□□□ □□□□ □□ □□
□□. CO, FTA, Form F, Form E...Ect□ □□ □□□ □□
□ □□ □□□ □□□□ □□□ □ □□□□. □□□ □□□ □□□ □□ □□
□□ □□□ □□□ □□□□. EXW, FOB, FCT, CIF, CFR...
□□ □□□ □□□□ □□□□. □□□ □□ □ □□□ □□ □□□ □ □□
□□□□ □ □ □□□□.

□□□□□ □□□ □□□□ 3□ □□ □□ □□□ □□□□!!!

□□□ 20□□ □□□ □□ □□ □□ □□ □□ □□□ □□ □□ □□□□□□ □□□ □□ □□□ □□□□ □□□ □□□□ □□□□ □□□! □□□□ □□□□□ □□□□□ "□□□" □□!

□□□ □□□ □ □□□ □□□ □□□ □□□□ □□□□ □□□ □□□□□ □□□□□.

□□ □□

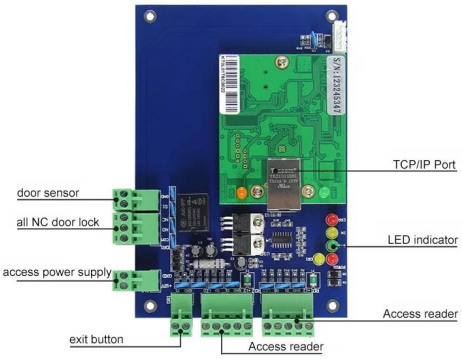

ACM-WEG01

□□□ 1□□ □□ □□□ □ □□□□.

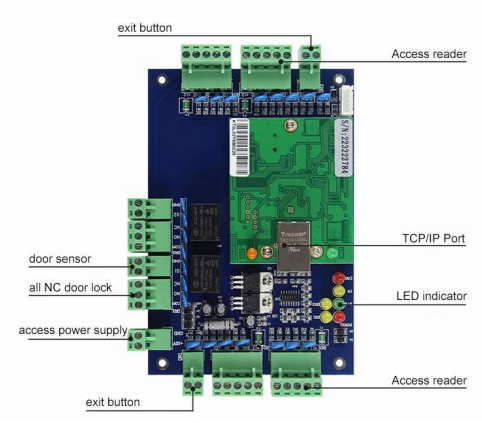

ACM-WEG02

□□□ 2□□ □□ □□□ □ □□□□.

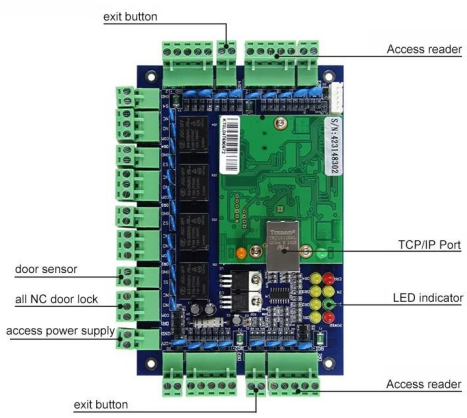

ACM-WEG04

□□□ 4□□ □□ □□□ □ □□□□.

You May Like

ACM-K2A/B

LED□□□ □□ □□ Realese □□ □□ □□

ACM-Y280

□□ □□ □□ □□ □□(280kg/600lbs)

ACM-Y806-5A

□□□ □□□ □□ □□ □□ 5A

ACM225

□□ □□□ RFID □□□ □□ 12khz

ACM-210

□□ □□ RFID Wiegand □□□ □□

ACM26X

125Khz EM □□ RFID □□□ □□:
115mm×75.5mm×16.8mm

□□ □□

ACM □□ Goldbridge □□ □□

□□□□ RFID □□□ □□ □□□□ □ □□□, □□□ □□ 20□ □□ □ □□□ □□□ □□□□. □□□ RFID □□□ □□ □□□ □□ □ □□ □□□ □□□ □□□□. □ □ □ □□ □□ □ □□ □ □□□□.RFID □□ , RFID keyfob , RFID □□ , RFID □□ □ □□□ RFID □□□.□□ □□□ □□ □□□ □□□□□□□□ □□□.

□□□ □□□

□□□ □□□ □□□ □□□□□.

1. □□ □□□□□ □□□□□□. 24 □□ □□
2. □□ □□□□ □ □□ □□, □□ □ □□□ □ □□ □□□ □□□□□.
□.OEM/ODM □□
4. □□□, fashin desing, □□□ & □□□□, □□ □□□□
5.□□ □ □□□ :
A: □□ □□□ □□□□ □□ □□□ □□□ □□ □□□ □□□ □□□□.
B: □□ □□□ □□ □□ □ □□□ □□□□.
C: □□□ □□□ □□ □□□□ □□ □□ □□□ □□ □□□□ 2-3□ □□□ □□□□.
6. □ □□ □□ : □□□□□ 1~5□, □□□□□ 7~30□ □□
7. □□ : T/T, Western Union, Paypal, Ali □□ □□□ □□ □□□ □□ □□□ □ □□□□.
8.□□: □□□ DHL, FEDEX, TNT, UPS, EMS, □□□□ by SEA □ By AIR□ □□□ □□ □□□ □□□□ □□□□. □□ □□□ □□ □□□□□ □□□ □□ □□□□.

□□ □□

1. □□□ □□ □□□ □□ □□ □□ □□□□ □□□□, ACM Goldbridge□ □□ □□□ □□ 2□ □□□ □□□□□.
2.□□□ ACM Goldbridge□ □□ □ □□ □□□ □□□□□.
3. □□□ □□□ □□□ □□□ □□□□□□.

□□□ □□□

□□□□

□□ □□□ □□□□□ □□ □□□□□ 3□ □□ □□ □□□ □□□ □ □□□□!!!
□□□ □□ 20□□ □□ □□□□ □□ rfid □□ □□□ □□ □□ □□ □□□ □□□ □□□□ □□□□ □□□□□□,

□□□ □□ □□□□ □□□□ □□□□ □□ □□□ □□□□□□!
□□□ □□□ □ □□□ □□□ □□□ □□□□ □□□□ □□□ □□□□□ □□□□□.