[illegible]

86x86x2mm.

[illegible]

,[illegible]3A[illegible]36VDC[illegible]+12VGNDNONCCOM.

1
-
2
℃
~
5
5
℃
(
1
4
°
F
-
1
3
1
°
F
)
-
9
5
%
(
)
-
2
℃
~
5
5
℃

Touch status

Power on status

EB-10

EB-11

CHENGYUAN
CHYRA5
+12
GND
COM
NC
NO

EXIT
Guarantee
User File
User name
Sex
Age
Address
Zip
Telephone
Retail price
Odd Numbers
Model No.
User Signature
Guarantee Item
1. 3months upon date of purchase, if there is function problem, we should offer the same item subject to goods and packing maintain perfect
2. 1year upon date of purchase, we will guarantee to keep the goods in repair. (not including fittings).
3. Guarantee service is subject to normally using.
4. All of damage by man-made(tear open the housing, tear off the sticker, unnormally using),or losing this card, we will not guarantee.

Wiring Diagram

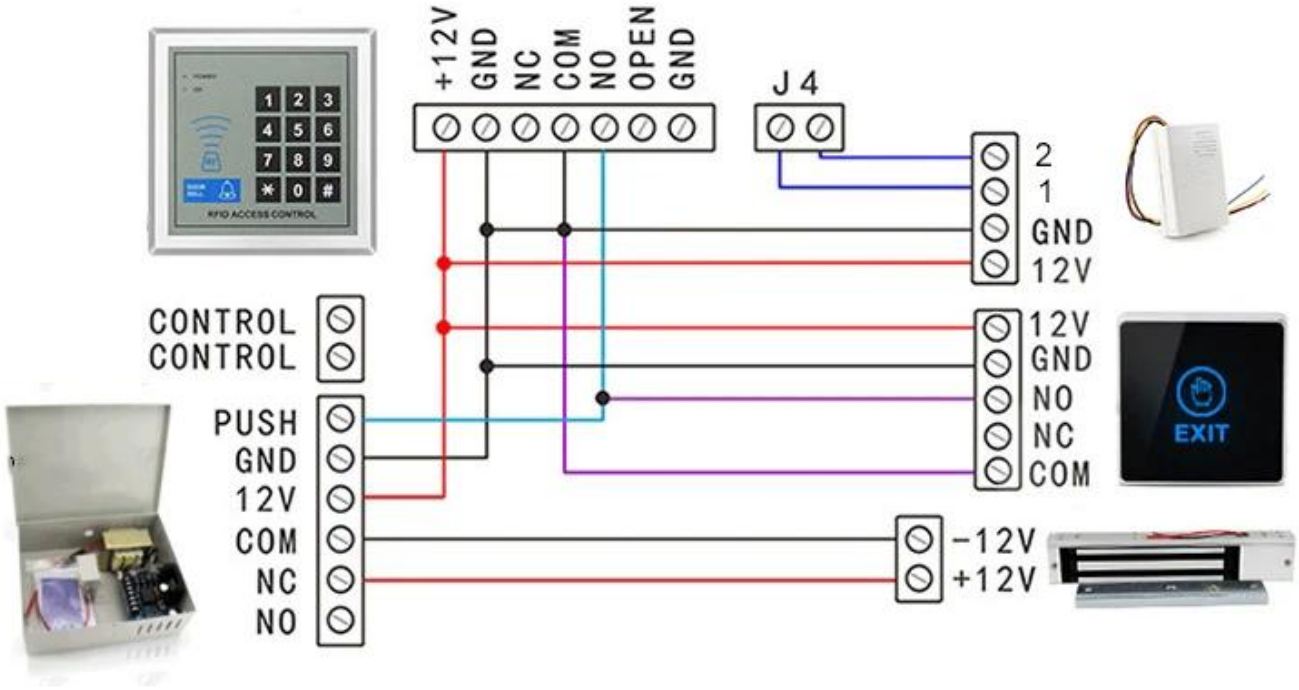

□□ □□ □□□□

□□□ □□ □□□ □□ □□□□ □□□ □ □□□□. □□, □□□□, □□ □□□□, □ □□□. □□□ □□□ □□ □□□ □□□□□□. □□ □□ □□□ □□□□□ □□ □ □□□□ □□□□.

No Touch
EXIT

EXIT

□□ □□ □□ □□□ □□□□

K2B : 86 * 86mm.
□□ □□ □□ □□ □□ □□
K9A : 115 * 40mm
□□ □□□ □□ (□□□□□ □□, □□□ / NC) K5B :
86 * 86mm

□□ □□□ □□, (□□, □□□□, □□□), K4B : 86 * 86mm
□□□□□ □□□ □□□ KIRISIT. K14B : 86 * 86mm.
□□□□□ □□□ □□ □□□ □□ □□; K815B : 86 * 86mm.

□□□ □□□

1, □□ □□□ 24 □□ □□□ □□□□□.
2, □□□ □ □□ □□ □□, □□□ □ □□□ □ □□□ □□□□ □□ □□□□□.
3, OEM / ODM □□
4, □□□, fashin □□□, □□□□□ □□□□□ □□, □□ □□ □□
5, □□□ □□□ :
1), □□ □□□ □□ □□ □□□ □□□□ □□ □ □□□□.
2) □□ □□□ □□ □□ □ □□□□□.
3), □□□ □□ □□□ □□□ □□□ □□ □□ 2-3 □ □□□□□□□.
6, □□ □□ : □□ □□□ □□ □ 1 ~ 5 □, □□ □□□ □□ 7 ~ 30 □
7, □□ : T / T, Western Union, Paypal □□□ □□ □□□ □□ □ □ □□□□.
8, □□ : □□□ DHL, FedEx, TNT, UPS, EMS, Sheaper□ □□□ □□□ □□□ □□□□□ □□□□. □□□□□ □□□ □□ □□□□.

□□□□ □□

Q : 1. □□□ □□□□□□□□?
A : □□ □□□ □□ □□□ □□ □□□□□□. □□□ □□□ □□ □ □ □□□ □□ □□□ □□ □□□ □□□ □ □□ □□□ □□ □ □□□□.

Q : 2. □□ □ □□□ □□□□?
A : T / T, Paypal, Western Union.
□□□ □□, □□ □□ □□□□□ (DHL, FEDEX, TNT UPS □)□ □□□ □ □□□□.

Q : 3. □□□ □□□□ □□ □□□ □□□ □□ □ □□□□?
A : □□□ □□□ □□ □ □□□□ □□□ □□□ □□□ □□ □ □ □□□□.

Q : 4. □□□ □□□ □□ □□□ □ □□□□?
A : □□□ □□ □□□□. □□□□□ 5000 □□□ □□ 3-7 □, 100,000 □□ □ 7-15 □

Q : 5. □□□ □□□ □□ □ □ □□□□?
A : □□ □□ □□□ □□, □□, □□ □ □□□ □□□□ □□□ □□□□□. OEM □□□ □□□□□.

Q : 6. □□ □□ □□ □□□□□?
□□□ □□ □ RFID □□ □□□□ / NFC □□ / RFID KeyBodi / RFID □□, RFID □□ □ 20 □ □□ □□□ □□□ □□ □□ □ □□□□□.