□□ □□

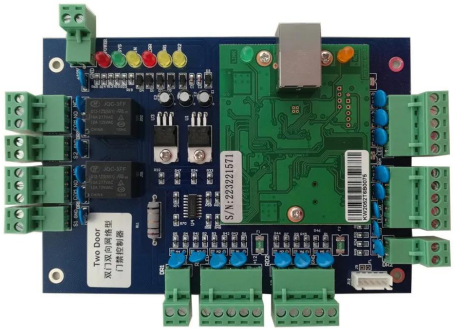

TCP / IP □□ □□ □□ □□ □□ □□ □□□ □□□□ □□□□ □□ □□□ □□

□□□ □□ □□□ □□□□ □□□□ □□□ □□□ □□ □ □□ □□□□□ □□□ □□□□□ □□□□ □□□□□. □□□□□ □□□ Access □□□□□□ □ □□ PC□□ □ □ □□ □□□□ □□□□□□□□.

□
□
□
□
□
□

2

TPC/IP 1

/2

/4

Weigand 26

1m (8m)

TCP/IP[illegible]([illegible]+[illegible],[illegible])[illegible]

□□□

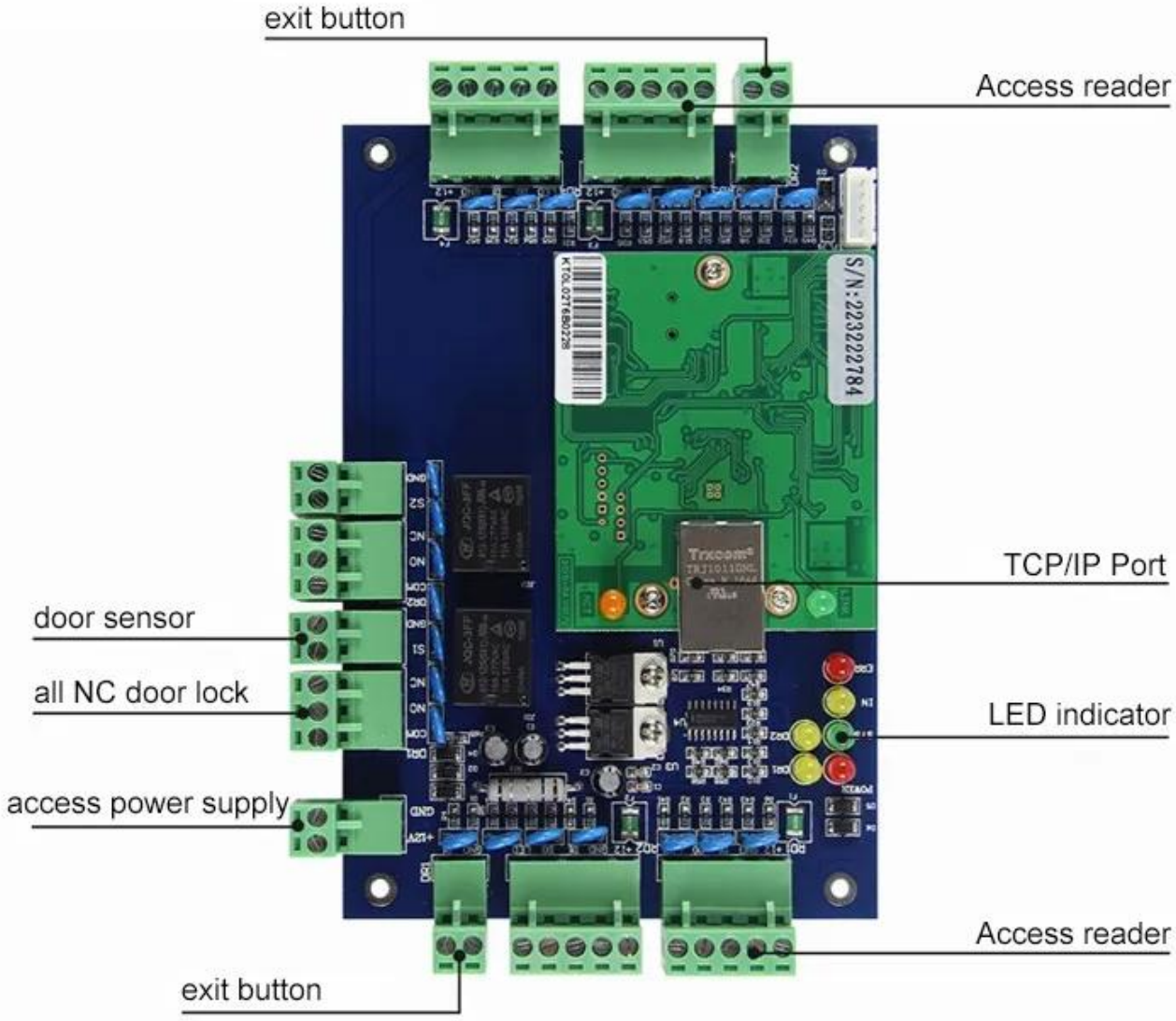
exit button
Access reader
TCP/IP Port
door sensor
all NC door lock
LED indicator
access power supply
Access reader
exit button

Double Door Acess Controller Wiring Diagram（TCP/IP Communication）

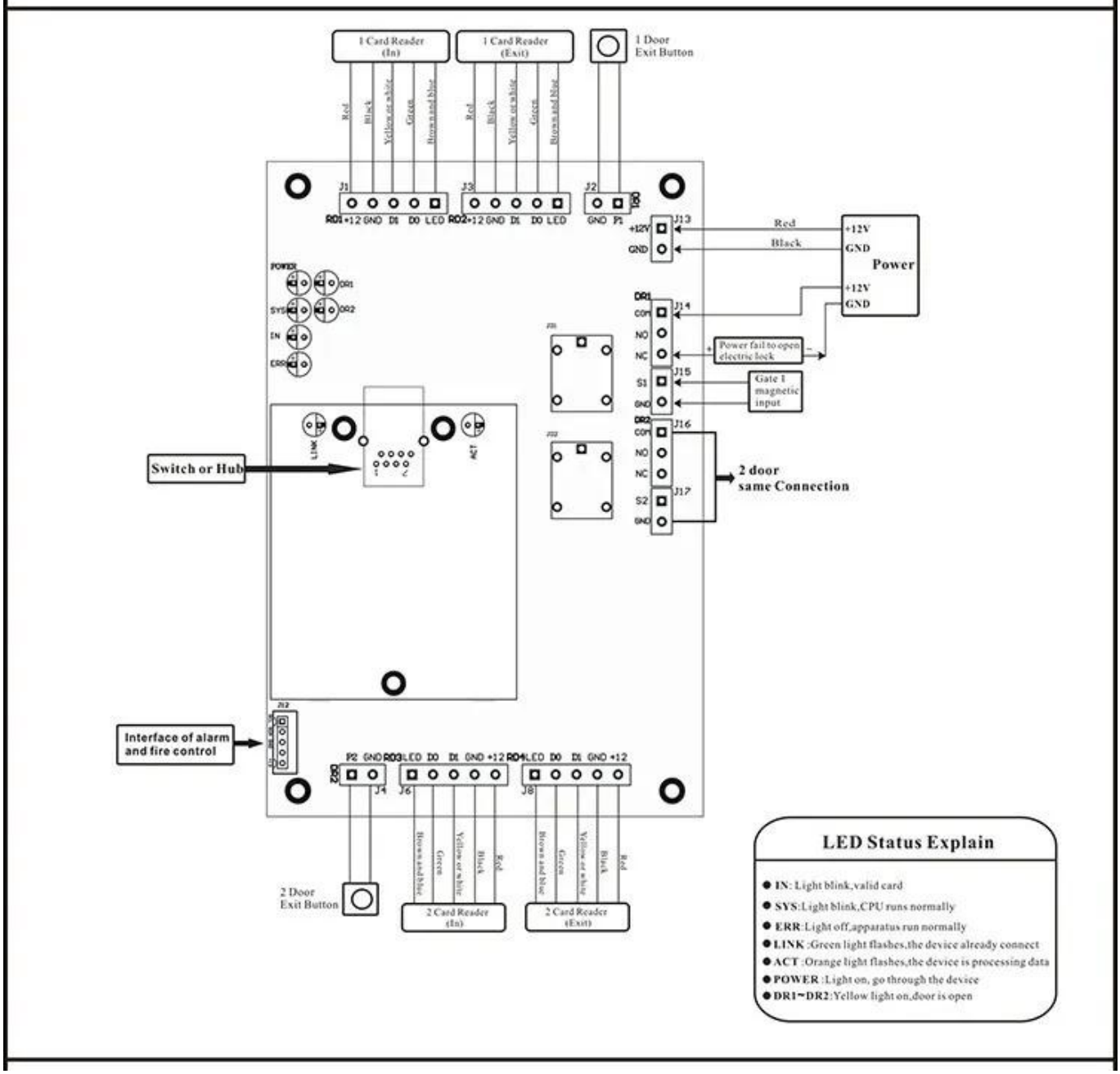

Scope of Application

Company

Hospital

Hotels

Logistics

Port

Financial

Government

Factory

Aviation

School

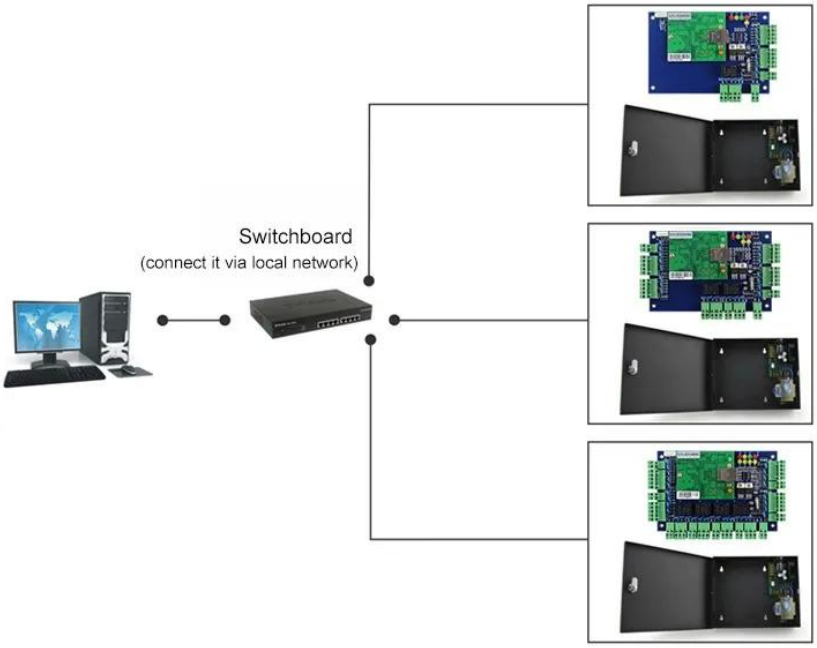

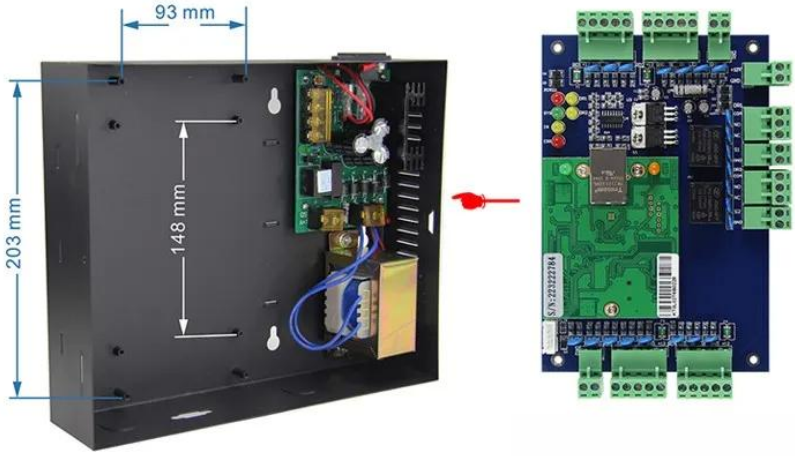

Kindly remind:

All network control board must configure with access power supply.
1 board for 1 power supply

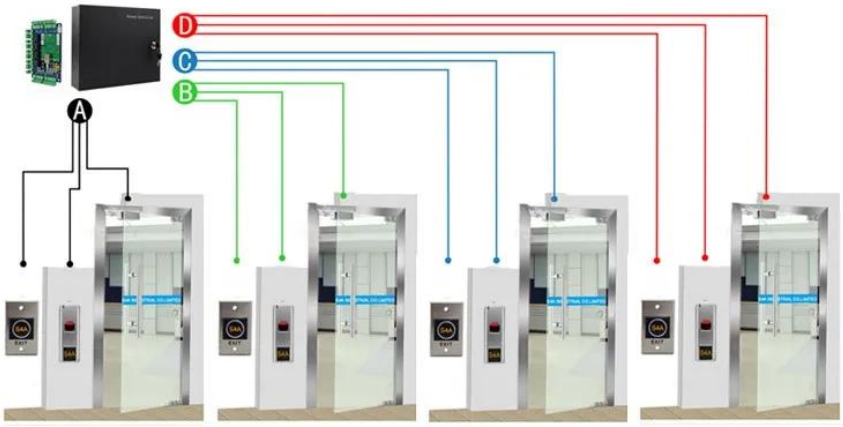

ACM-WEG04

Four doors 1 way: Control 4doors (Enter by Swipe cards and Exit by Push button)

□□ & □□

□□ □□ □□□ □□□ □□□ □□□ □□□ □□ □ □□□ □□□ □□ □□□□□.
□□ □□□ □□□□ □□□ □□□ □□ □□□□□ □□ □ □□□□.
□□□ □ □□ □□ □□□ □□ □ □□□□.

□□ □□ (□□ □□ □□ □)

□□□ 2000 □ □□ □□□□ RFID □□□ □□ □□□ □ □□□□□. □□□ □□ □□ □□□ □□ □□□ □□□□ □ □□ □□□, □□□ □□□ □□□ □□□ □□□□□ □□ □□ / □□ □□□ □□□□ □□□□□ □□ □□ □□□□. □□□ CO, FTA, □□ F, □□ E □ □□□ □□□ □□□□ □□□ □□ □□□ □□□□ □□ □ □ □□□□ ... □□. □□□ □ □□ □□□ □□ □□□ □□□□ □□□ □□ □ □□□□. EXW, □□ □□, FCT, CIF, CFR ... □□ □□□ □□□ □□ □□□□. □□□ □□ □ □□□□□ □□□ □□□ □□□□ □ □ □□□□.

You May Like

ACM-K2A / B

□□ □□□□□□ Realse Exit □□□ □□□□.

ACM-Y180

□□ □□ □□□□ □□□ (180kg)

ACM-Y806-5A

□□□ □□□ □□ 5A

ACM225

□□ □□□ RFID □□□ □□ 12khz

ACM-210

□□ □□ RFID Wiegand □□□ □□

ACM26X

125Khz EM □□ RFID □□ □□ : 115mm × 75.5mm × 16.8mm

□□□ □□□

1, □□ □□ 24 □□ □□□ □□□□□
2, □□ □□ □ □□ □□, □□ □□ □□□□□ □□□ □ □□□ □ □□ □□ □□
3, OEM / ODM □□
4, □□ □□, fashin desing, □□□□ & □□□□□ □□, □□ □□ □□
5, □□□ □□□ :
1), □□ □□□ □□□□ □□□□ □□ □□□ □□□□ □□□□.
2), □□ □□□ □□ □□ □ □□□□□.
3), □□□ □□ □□□ □□□ □□□ □□ □□□□ □□ □□ 2 ~ 3 □ □□□□□
6, □□ □□ : □□ □□ □ 1 ~ 5 □, □□ □□ □ 7 ~ 30 □
7, □□ : □□□ □□ □□□ □□ □□□ □□ □ □ □□□□ : T / T, Western Union, Paypal, Ali trade assurance
8, □□□ : □□□ DHL, FEDEX, TNT, UPS, EMS, SEA □ AIR□ □□ □□□□□□ □□□ □□ □□□ □□ □□ □□□ □□ □□□ □□□ □ □□□□.

□□□□ □□

Q : 1. □□□ □□□ □ □□□□?
A : □□□ □□ □□□ □□□□ □□□□□□. □□□ □□ □□ □□□ □□□ □□ □□□ □□ □□ □ □ □□□ □□□□□□□.

Q : 2. □□ □ □□□ □□□□□□?
A : □□ □□ □ T / T, Paypal, Western Union.
□□□ □□, □□ □□ □□□□□ (DHL, FedEx, TNT UPS □)□ □□□ □ □□□□.

□□ : 3. □□□ □□□□ □□ □□□ □□□ □□ □ □□□□?
A : □□□ □□□□ □□ □□□ □□ □ □ □□□, □□□ □□□□□□ □□□ □□ □ □ □□□□.

Q : 4. □□□ □□□ □□ □□□ □ □□□□?
A : □□□ □□ □□□□. □□□□□ 5000pcs□ □□ 3-7 □, 100,000pcs□ □□ 7-15 □

□□ : 5. □□□ □□□ □□ □ □ □□□□?
A : □□, □□, □□ □ □□□ □□□□ □□ □□ □□□ □□□ □□□□□. OEM □□□ □□□ □□□□□.

Q : 6. □□□ □□ □□□□□ □□□ □□□□□?
□□□ 20 □ □□ □□□□ RFID □□ / NFC □□ / RFID keybod / RFID □□ □, rfid □□ □ □□□ □□ □□□ □□ □ □□ □□ □ □□□□ □.