□□ □□

□□□ □□ □□□ □□ □□□ □ □□□ □□□□.

1. □□ □ □□□ □□□ □□□□ □□□□ □□□□□ □□□□□.
2. □□ □□, □ □□, □□□ □□□□□ □□□□□ □□.
3. □□ □□ □□ □□.
4. □□ / □□ / □□□ / □ □□ / □□ - □□ □□□ □□ □□ □□□
□ □□□□.
5. □□ □□□□ □□□□ □□.
6. □□ □□□ □ □□ □□ □□.
7. □□ □□□ □□ □□□ □ □□ □□ □□□ □□
8. □□ □□

□□ □□

□□ □□ □□□□ □□ □□□□ □□□□□ □□ □□ □□□□□□ □□ □□□ □□□□□.
□□ □ □□ □□ □□ □□ □□ □□ □□□□ 110 □□□ □□ □□□ □□ □□□□ □□□□.
□□ 220VAC ± 10 %, □ □□ □□□ □□ □ □□□□ □□ □□ □□ □□□□ □□□□.
□□□, □□, □□ □, □□, □□□ □□ □□ □□□□□ □□□□□□ □□□ □□□.

2ways □□ □□□ □□□□□.
1. □□□ □□□ □□□□, □□□ □□ □□□ □□, □□ □□□ □□ □□□□ □□ □ □□□□.
2. RFID □□ □□□ □□ □□□□ □□□□, □□, RFID, □ □□ □□ □□□□□ □□□□ □□□ □□ □□□ □□□□□□.

Intelligent Automatic Flat Door system

Installation mode

Pull-arm mounting: Suitable for door wing opening inward (drive system inside)

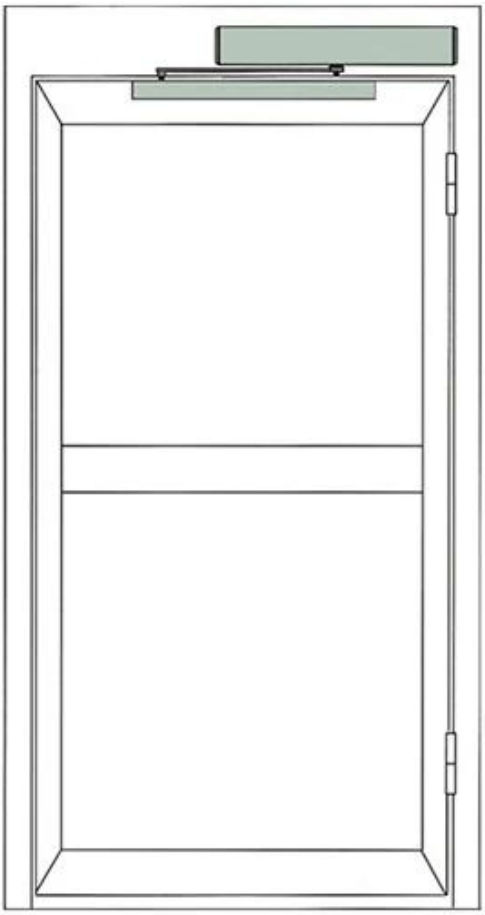

Push Arm Installation: Suitable for door wing opening outward (drive system inside)

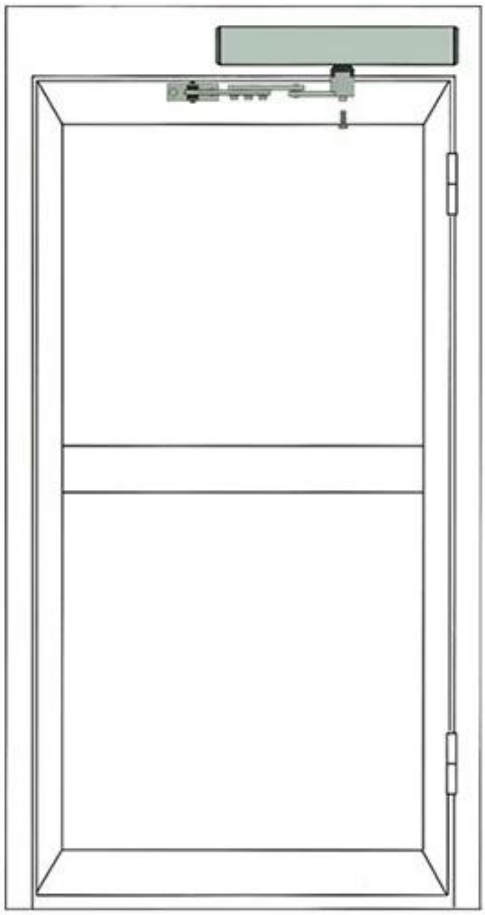

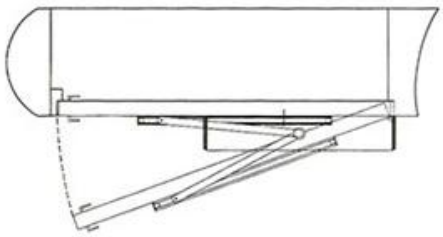

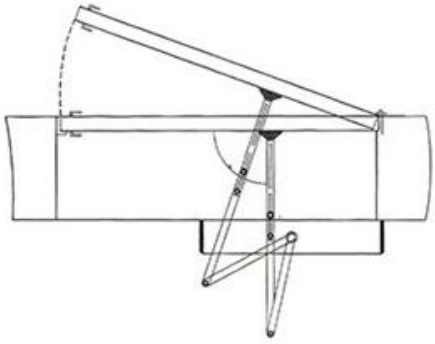

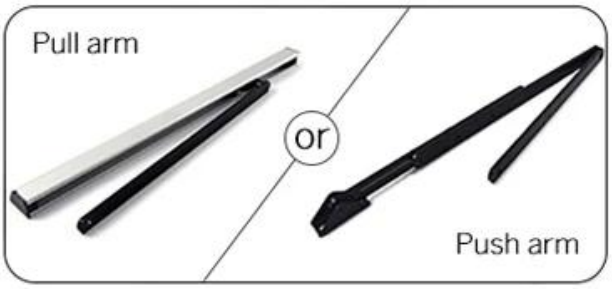
Pull arm
or
Push arm

M-204T (Optional)

Dimensions(mm)

Pull arm

Push arm

□□ □□

- □□□□ □□ □□□ □□□ □□ □□□□ □□□ □□□□□. ACM Goldbridge□ □□ □□□ □□ 2 □ □□□ □□□□□.

- □□□ ACM Goldbridge□ □□□□ □□ □□□ CAHRGE□□□.

- □□□ □□□ □□□ □□□ □□□□□□.

instalation □□□□□

□□ □

Installation example

Pull-arm mounting: Suitable for door wing opening inward (drive system inside)

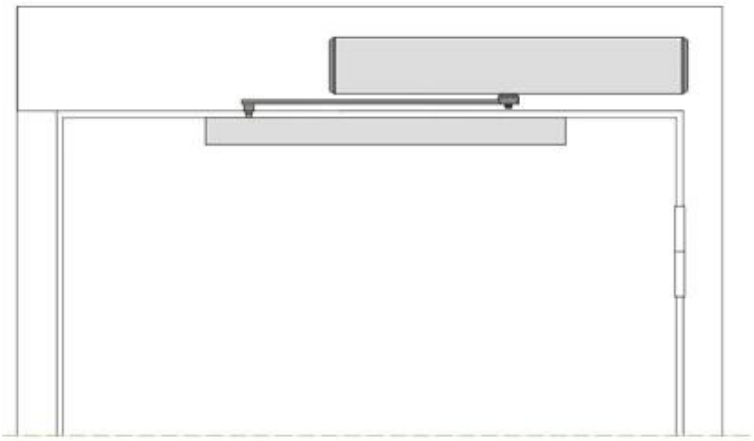

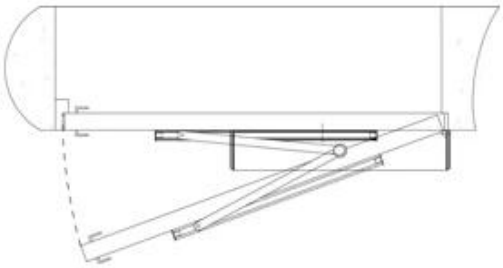

Push Arm Installation: Suitable for door wing opening outward (drive system inside)

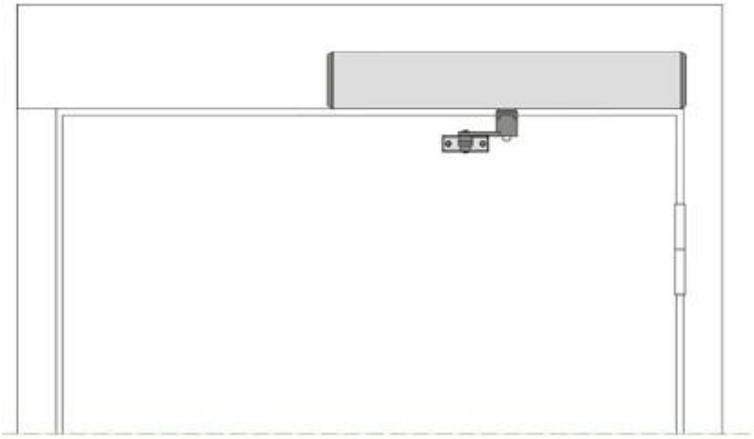

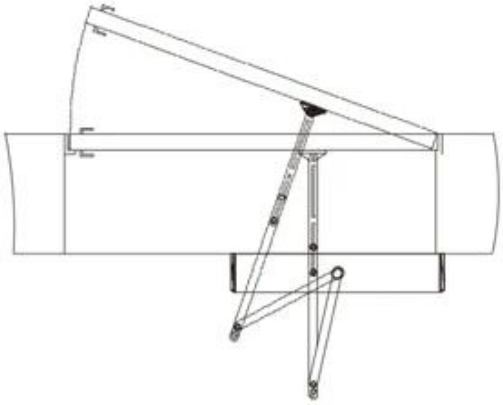

□□ □□

□□□ 20 □ □□□ □□ □□ □□□ □ □□ □□□ □□ □□ □□ □□□□□, □□□
□□□ □□ □□□ □□□□ □□□ □□□! □□□ □□ □□□ □□□□□□. □□□□ "□□□"□ □□□□□□!
□□□□ □□□□□

You May Need

RFID Card

RFID Key fob

RFID Wristband

RFID Reader

Long Distance UHF Reader

Access Control Reader

WHY CHOOSE US?

- **Long History & High Reputation**

  Founded in 1999.Great Creativity Group dedicates in R&D,producing and sale of RFID products and Plastic Card. We own 12,000 square meters factory,3000 square meters office and 8 branches so far.

- **Advanccd Equipments & Ultimate Production Ability**

  2 Modern high standard production lines with monthly output 30,000,000pcs cards.
  Brand-new CTP machines and Germany Heidlberg offset printing machines.
  10 sets of compounding machines.

- **Self R&D Customization**

  Our company offering management application project, equipment application, scheme and personalized RFID end product.

- **Strict Quality Control**

  Strict QC System from raw material to finished products.
  We have passed certifiated ISO9001, SGS, ROHS, EN-71, BV etc.
  We promoise all products will be examined strictly and
  we ensure that the products we deliver to you with top quality.

Honers & Certificates