□□ □□

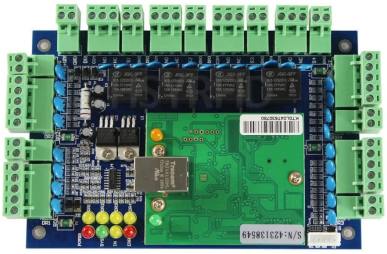

□□ □□ TCP / IP + WG26 RFID 4 □□ □□□ □□□□

□□□ □□ □□□ □□□□ □□□□ □□□ □□□ □□ □ □□ □□□□□ □□□ □□□□□ □□□□ □□□□
□. □□□ □ Access □□□□□□ □ □□ PC□□ □ □ □□ □□□□ □□□□□□□□.

□
□
□
□
□
□

4

TCP/IP

1
/
2
/
4
2
6
1
m
8
m

TCP/IP

> [illegible]

[illegible] [illegible]

[illegible] [illegible] [illegible] [illegible] [illegible] [illegible] [illegible], [illegible] [illegible], [illegible], [illegible], [illegible] [illegible] [illegible], [illegible] [illegible] [illegible] [illegible] [illegible] [illegible] [illegible] [illegible] [illegible] [illegible] [illegible]. [illegible] [illegible] : [illegible] [illegible] [illegible] (NO [illegible] NC), [illegible] [illegible], [illegible] [illegible] ([illegible] [illegible] [illegible] [illegible] [illegible]). [illegible] [illegible] [illegible], [illegible] [illegible] [illegible] [illegible] ([illegible] [illegible]), [illegible] [illegible] [illegible] [illegible] [illegible] [illegible]. [illegible] [illegible] [illegible] [illegible] [illegible] [illegible] [illegible] [illegible]. [illegible] [illegible] [illegible] [illegible] [illegible] [illegible] [illegible].
[illegible] [illegible] [illegible] [illegible] [illegible] [illegible] [illegible] [illegible] [illegible] [illegible].

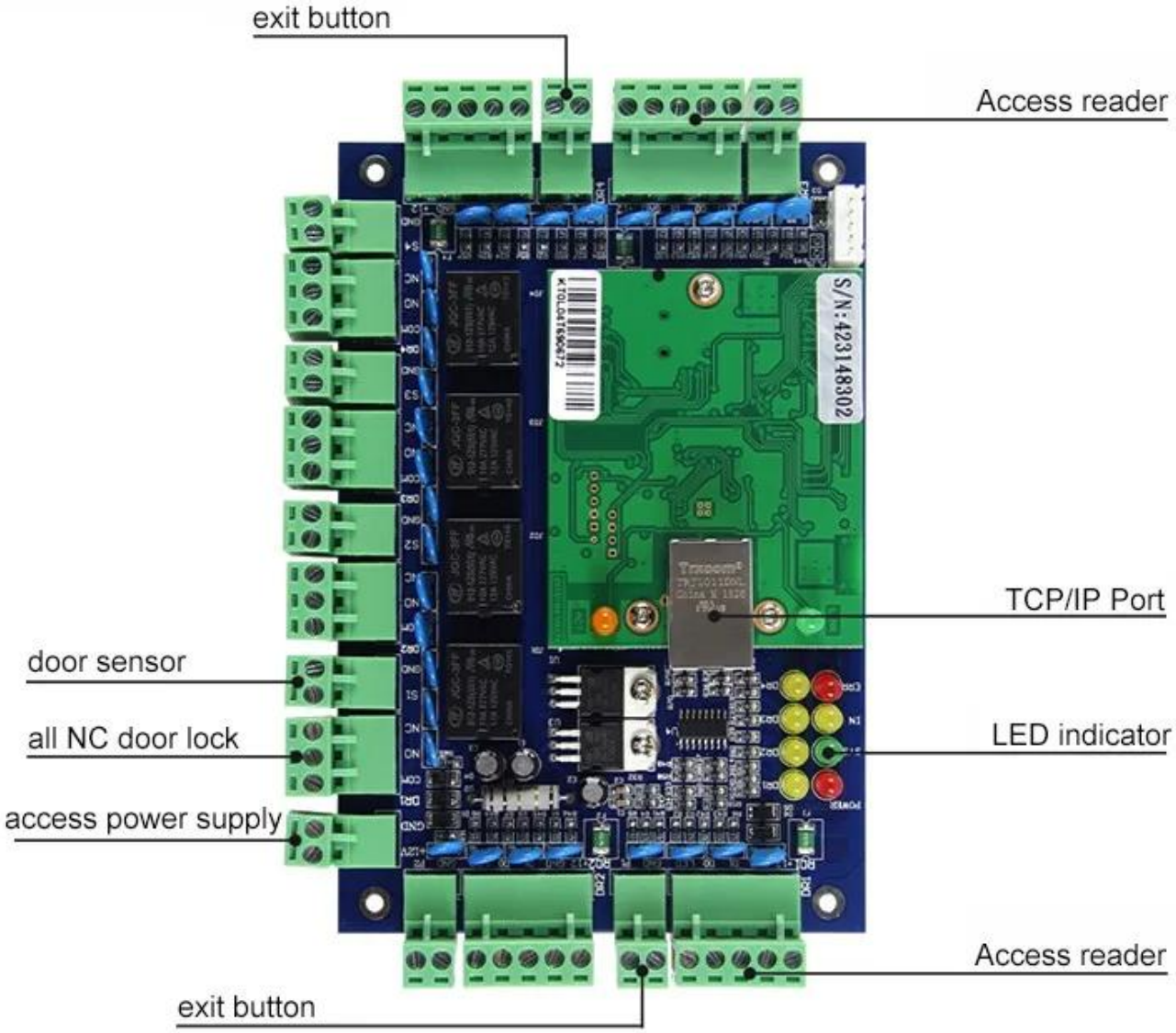
exit button
Access reader
TCP/IP Port
door sensor
all NC door lock
LED indicator
access power supply
Access reader
exit button

Four Door Acess Controller Wiring Diagram（TCP/IP Communication）

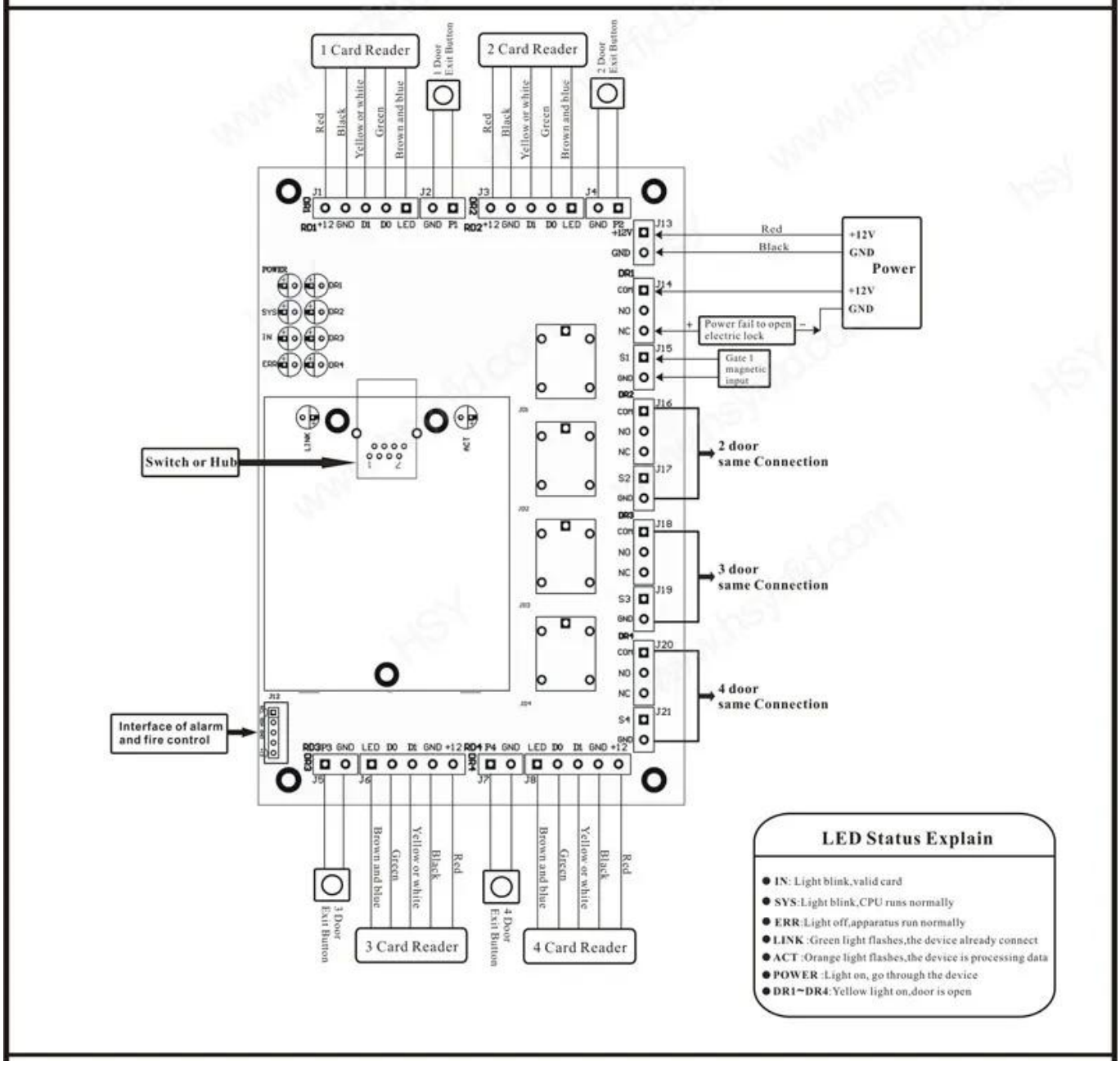

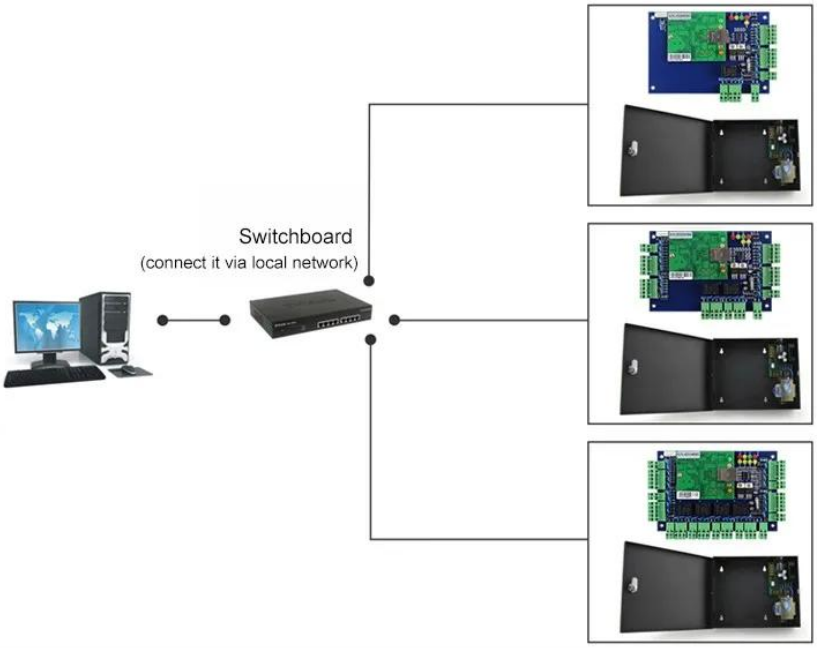

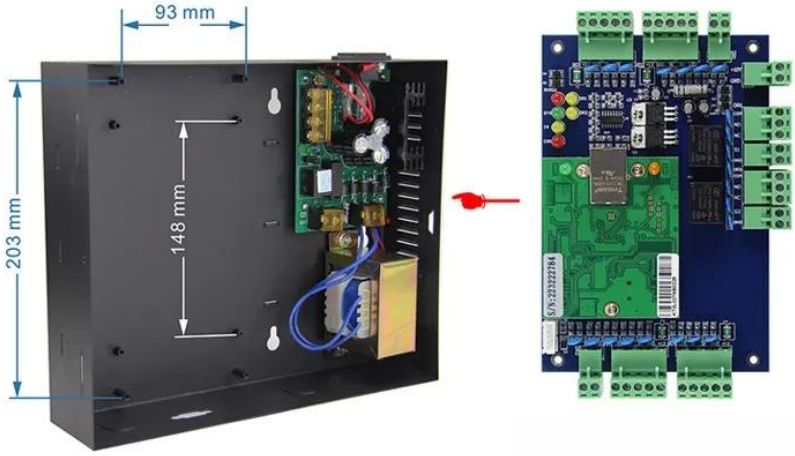

Kindly remind:

All network control board must configure with access power supply.
1 board for 1 power supply

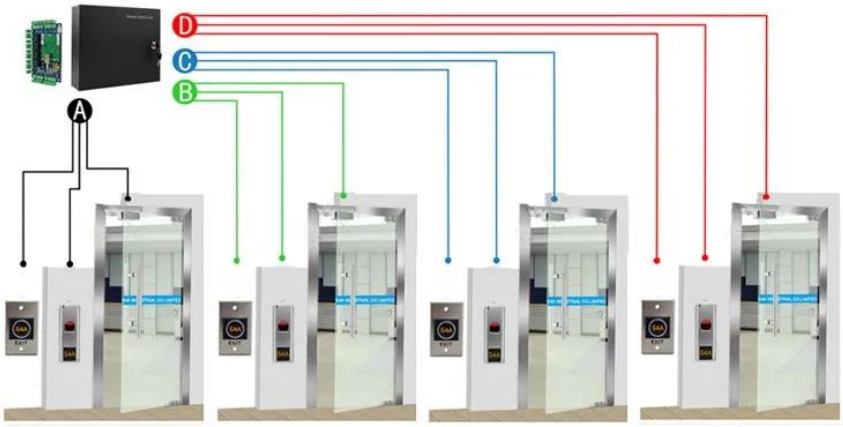

ACM-WEG04

Four doors 1 way: Control 4doors (Enter by Swipe cards and Exit by Push button)

Scope of Application

□□ □ □□

□□ □□□ □□□ □□□ □□□ □□ □ □□□ □□□ □□ □□□□□.
□□ □□□ □□ □ □□□ □□□□ □□ □□□□ □□□□□.
□□□ □□□ □ □□ □□ □□□ □□□ □□□□.

□□ □□ (□□ □□ □□ □)

□□□ 2000 □ □□ □□□□ RFID □□□ □□ □□ □□ □ □□□□□□. □□ □□□ □□ □□□ □□□ □□□□ □□□ □□ □□□ □ □□ □□□ □□□ □□□ □□ □□□□ □□□ □□□ □□ □□ □□ / □□ □□□ □□ □□□□. □□□ CO, FTA, Form F, Form E□ □□ □□□ □□□ □□□□ □□ □□□ □□□□ □□ □ □ □□□□. □□□ □□□ □□ □□□□ □□□ □□ □ □□□□. EXW, FOB, FCT, CIF, CFR ... □□ □□□ □□□□□. □□□ □□ □ □□□ □□ □□□ □□□ □□□□ □ □ □□□□.

□□□ 20 □□ □□□ □□ □□□ □□ □□ □□ □□□ □□ □□ □□□□ □□□ □□ □□ □□□ □□□□ □□□□□! □□ □□ □□□ □□ □□□ □□□□ "□□□"□□! □□□ □□□ □ □□□ □□ □□□ □□□□ □□□□ □□□ □□□□□ □□□□ □□□□.

You May Like

ACM-K2A / B

□□ □□ □□ Realese Exit Button with LED

ACM-Y180

□□ □□ □□ □□ □□ (180kg)

ACM-Y806-5A

□□□ □□□□□ 5A □□ □□ □□

ACM225

□□ □□□ RFID □□□ □□ 12khz

ACM-210

□□ □□ RFID Wiegand □□□ □□

ACM26X

125Khz EM □□ RFID □□ □□ : 115mm × 75.5mm × 16.8mm

□□□ □□□

1, □□ □□□ 24 □□ □□□ □□□□□
2, □□ □□□□ □ □□ □□, □ □□□ □ □□ □□□ □□□□□.
3, OEM / ODM □□
4, □□□, fashin □□□, □□□□□ □□□□□ □□, □□ □□ □□
5, □□ □ □□□ :
1), □□ □□□ □□□□ □□ □□□ □□□□ □□□□□□□
2), □□ □□□ □□□□ □□ □ □□ □ □□□□
3), □□□ □□ □□□ □□□ □□□ □□ □□□□ □□ □□ 2-3 □ □□□ □□□□.
6, □□ □□ : □□ □□□ □ 1 ~ 5 □, □□ □□□ □ 7 ~ 30 □
7, □□ : □□□ □□ □□□ □□ □ □ □□□□ : T / T, Western Union, Paypal,
8, □□ : □□□ DHL, FEDEX, TNT, UPS, EMS, SEA□ □□□ □ AIR□ □□□ □□ □□□ □□ □□□ □□□ □□□□ □□□ □□ □□□□.

□□□□ □□

Q : 1. □□□ □□□ □ □□□□?
A : □□□□ □□ □□□ □□□□□□. □□ □□ □□□ □ □□ □□□ □□ □□□□□□. □□□ □□□□ □□□ □ □□ □□□ □□ □ □□□□.

Q : 2. □□ □ □□□ □□□□□?
A : □□ □□ □ T / T, □□□, □□□ □□□.
□□□ □□, □□ □□ □□□□□ (DHL, FedEx, TNT UPS □)□ □□□ □ □□□□.

Q : 3. □□□ □□□□ □□ □□□ □□□ □□ □ □□□□?
A : □□□ □□□ □□ □ □□ □□ □ □□ □□□ □□□□ □□ □ □□□□□□.

Q : 4. □□□ □□ □□□ □□ □ □□□□?
A : □□□ □□ □□□□. □□□□□ 5000 □□□ □□ 3-7 □, 100,000 □□□ □□ 7-15 □

Q : 5. □□□ □□□ □□□ □□□ □□□ □ □ □□□□?
A : □□, □□, □□ □ □□□ □□□□ □□ □□ □□□ □□□ □□□□□. OEM □□□ □□□□□.

Q : 6. □□□ □□ □□□□□ □□□ □□□□□?
□□□ 20 □ □□ □□□□ RFID □□ / NFC □□ / RFID keybod / RFID □□, rfid □□ □ □□□ □□ □□□ □□ □ □□□□ □ □□□□□.