Access Controller

Hot Selling Products

Biometric AI Face Recognition Temperature Measurement	Time Attendance And Door Access Control	Tuya Touch Keypad Access Control	WG 26 Touch Access Control
Standalone Access Control	Keypad Access Control	Waterproof Access Control	Keypad Access Control
Metal Access Control	WiFi Access Control	Magnetic Lock Control System Kit	Tuya Wifi Biometric Fingerprint Lock

3000 users fingerprint rfid access control system with software for office entance

Product Description

Product Advantages:

ACM Manufacturer TFS70 Biometric Access Control Cloud. with high steady and strong access control functions together. With the top algorithm to make sure the identification speed and rates, suits all company and buildings.

Products Features:
> Multiple identifications: fingerprint and card.
> 500 Dip hidden fingerprint sensor for dry fingerprint and strong sunshine.
> Wiegand in&out to combine with an access controller such as ACB-001, 002, 004, and RFID readers.
> Standard TCP/IP, RS485, USB for communication with computers and servers together.
> With software management together for time attendance and access control.
> Lighted keypad for easier operation and use at night.
> Free SDK and Free software
> Two doors interlock function: A door opens, B door closed.

Card	ID (IC Optional)
Fingerprint Capacity	3000
Card Capacity	3000
Record Capacity	100000
Display	2.0 inches
Identification Style	Fingerprint, PIN, Card
Identification Speed	≤1.0s
Identification Mode	1:N, 1:1
Power supply	DC12V 1A
Communication	USB, R485, TCP/IP, (Optional WIFI)
Dimension	185*64*47mm
Language	English, Spanish, Turkish, Arabic, Thai, Korean, and so on

TFS70 Fingerprint Access Control

- Fingerprint Capacity: 3000
- Communication: USB , RS485, TCP/IP, (Option WIFI)

www.s4a-access.com

Optical fingerprint recognition

- Backlit fingerprint head
- Finger, PIN, Card

\

Product Dimensions

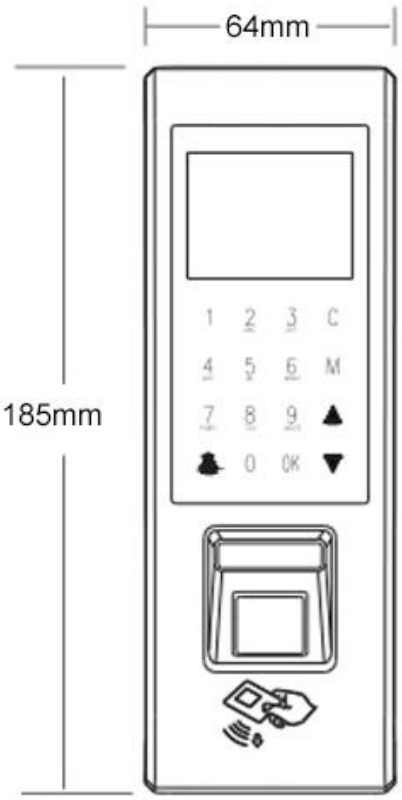
64mm
185mm
1 2 3 C
4 5 6 M
7 8 9
0 OK

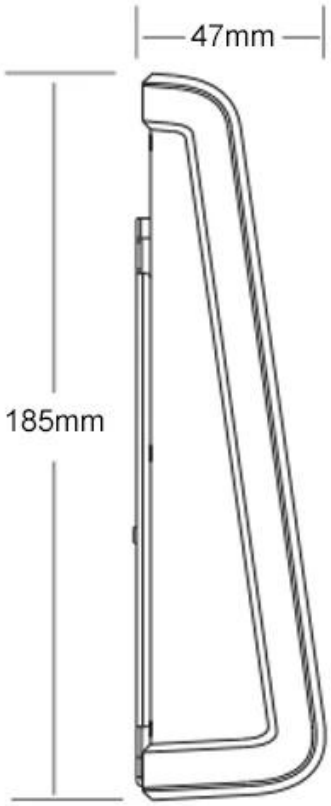
47mm
185mm

SCOPE OF APPLICATION

Hospital

Enterprise

School

Residential

Related Products

SHENZHEN GOLDBRIDGE INDUSTRIAL CO.,LTD

Access Control System

Complete Door Access Control Solution Provider

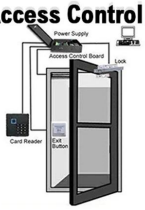

Hot Selling Equipments

BEST SELLERS

Standalone Fingerprint & RFID Outdoor Waterproof Access Controller

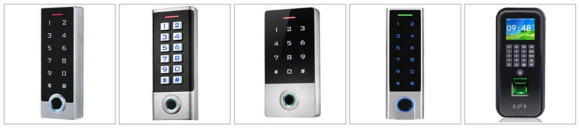

ACM-209E | ACM-209V | ACM-209H | ACM-210E | ACM-9800

ACM-209D | ACM-209F | ACM-851 | ACM-TM07 Face Recognition | ACM-TM05 Face Recognition

Standalone Waterproof Metal RFID Access Control

ACM-211A | ACM-212A | ACM-208A | ACM-210A | ACM-208B

ACM-208C | ACM-A65 | ACM-A55 | ACM-210F | ACM-209A

Standalone Waterproof Touch Screen /Keypad RFID Access Controller

ACM-230K | ACM-230T | ACM-223 | ACM-225 | ACM-227

ACM-226 | ACM-301C | ACM-301D | ACM-212 | ACM-212C

Touch Screen Standalone Waterproof Metal RFID Access Controller

ACM-A40 | ACM-A50 | ACM-A10 | ACM-A20 | ACM-A30

ACM-A60 | ACM-A80 | ACM-A88 | ACM-A21 | ACM-A51

www.goldbidgesz.com ;sales@goldbridgesz.com

Company Information

20+ YEARS EXPERIENCE

OEM & ODM

ACCESS CONTROL SYSTEMS ONE STOP SOLUTION PROVIDER

Goldbridge is Top 10 China Manufacture On Alibaba,
Specializes In Provide Kinds Of RFID/NFC Cards, FID Tags, RFID Card Reader, UHF Reader, Access Control System, Electromagnetic Locks, etc Since 1999

Customized Services | Qually Assurance | Fast Delivery | Best After-Sales Service

OUR FACTORY

- **Access Control and RFID Reader Production Line:**
- Monthly production quantity is up to 50,000pcs , We are Provides OEM&ODM services including product research and development, LOGO printing, customized.etc

- **Electromagnetic lock & Smart Door Lock Production Line :**
- Monthly production quantity is up to 100,000pcs ,
- Our factory is built with modern manufacture environment, facilities, equipment and professional operation technicians.
- Goldbridge Provides OEM&ODM services including product research and development, LOGO printing and product box customized.

- **RFID & NFC Cards & Tags Production Line :**
- RFID Tag, Wristband, Keyfob: 11,000,000pcs (monthly output)
- Four Production Lines For Smart Card, PVC Card, Prelam Sheet: 20,000,000pcs (monthly output)
- Goldbridge Provides OEM&ODM services for LOGO printing, development, customized.

ADVANTAGE

WHY CHOOSE US?

1. **FAST DELIVERY** Faster delivery by air by express. (DHL,UPS or Fedex)
2. **LONG HISTORY** 20 years experience in RFID & Access Control industry
3. **OEM ACCEPTABLE** 20 years OEM&ODM experience for 1000 + VIP client from US and Europe
4. **HIGH QUALITY** Design and manufacture high quality produtcs with 30 R&D; engineers.

APPLICATION

Bus, supermarket,school, government, hospital, factory

CERTIFICATE

Access Control CE | Access Control Rohs | EM Lock EMC Certificate | EM Lokc ROHS Certificate

RFID Card Reader CE | RFID Card Reader Rohs | UHF Reader CE Certifiate | UHF Reader ROHS

PRODUCT CATEGORY

RFID / NFC SMART CARD

Be customized according to you need

Fit for systems of transport, E-payment, Access Control, Event, Loyalty, ect.

View More

ACCESS CONTROL SYSTEM

Security for All: Network Access Control Board ,Standalone Access Controller, Biometric Access Control, T&A time attendance, Facial Access Control

View More

RFID & LONG RANGE UHF READER

20+ Years of professional Experience in production of rfid uhf hardware

- UHF desktop reader writer,
- UHF integrated reader,
- UHF R2000 fixed reader,

View More

ELECTRONMAGNETIC LOCK

Professional Electric Locks Manufacturer In China

Electromagnetic lock with OEM & ODM since 1999 60KG /110KG /180KG /280KG /350KG /500KG

View More

FAQ

Q1 How can I place an order?

A1 Click start to order or list your requirement to us by email. Then we will send the offer to you ASAP, after the order confirmed, we will arrange production ASAP.

Q2 What about the payment and shipment?

A3 T/T , Paypal, Western Union etc.
You can choose your agent or via our agent by sea, air or express (DHL,FedEx, TNT UPS etc.)

Q4 How can I get a sample to check your quality?

A4 We could provide the sample to you, pls check the sample cost and freight cost with us.

Q5 How long can I expect to get the goods?

A5 It depends on the quantity and shipping way. You can check with us before ordered.

Q6 Can your products be customized?

A6 Almost all of our products are customized , including the material, size, thickness and printing. OEM orders are highly welcome.

Contact Us

BACK TO HOMEPAGE >