Description:

It's a sensitive touch exit button with an adaptive capacity of temperature and humidity, meanwhile, it won't change sensitivity and stability as the weather changes.

Output NO or NC signal and LED on upon touch it, Static LED is green, LED is red upon touch it.

Dimensions	86 X 86 X 18mm
Operating Voltage	DC9-12V
Working Current	600mA
Operating Temp	-30 ° C ~ 60 ° C
Operating Humidity	20% -80%
Weight	82g

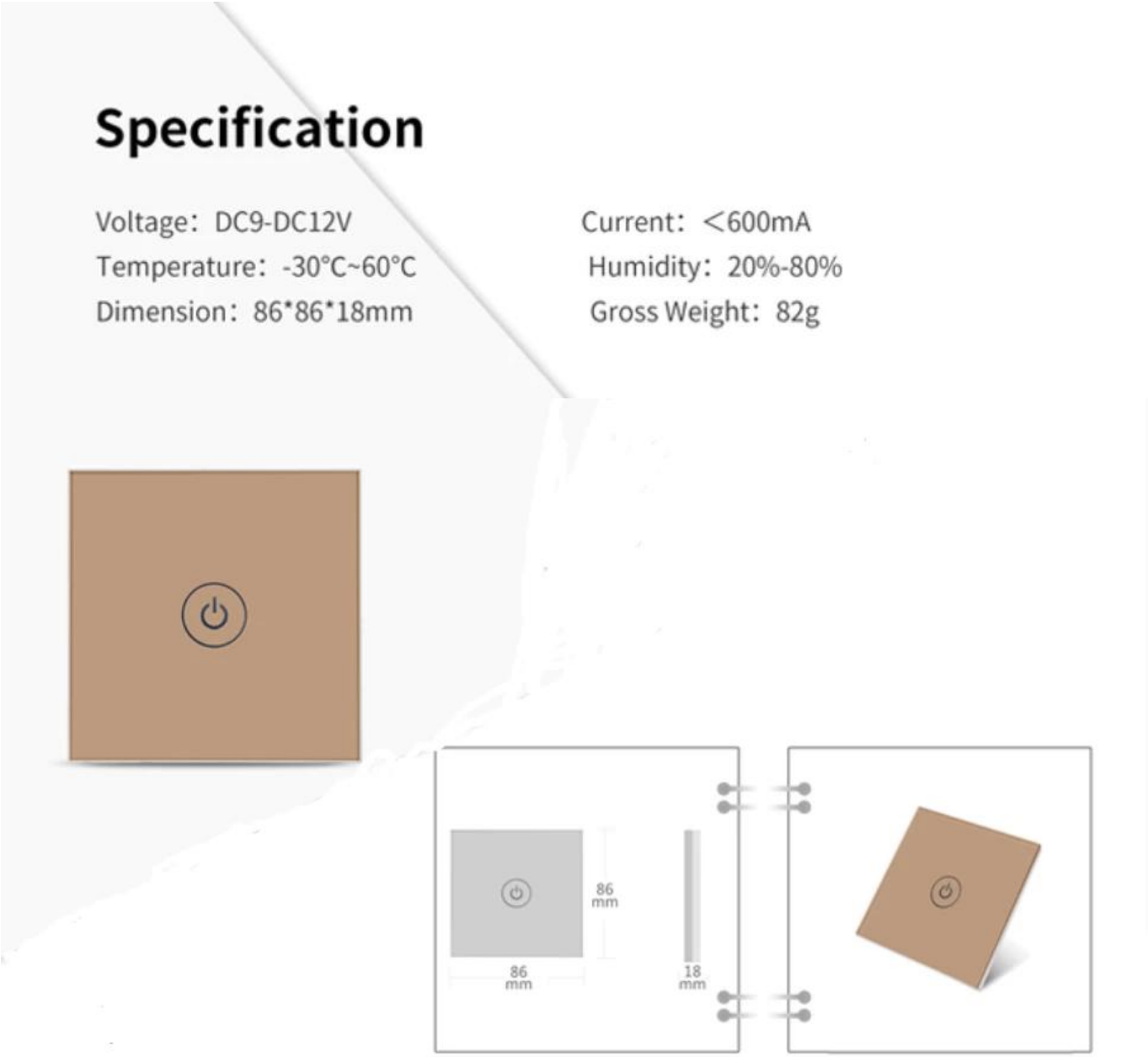

Description

This product is a capacitive touch sensitive door access switch, with automatic environment temperature and humidity Adaptability, not affected by weather change sensitivity and stability. Output when touching Normally open or normally closed switch signal, indicator light display： green in standby, touch The light is red.

Dimensions(mm)

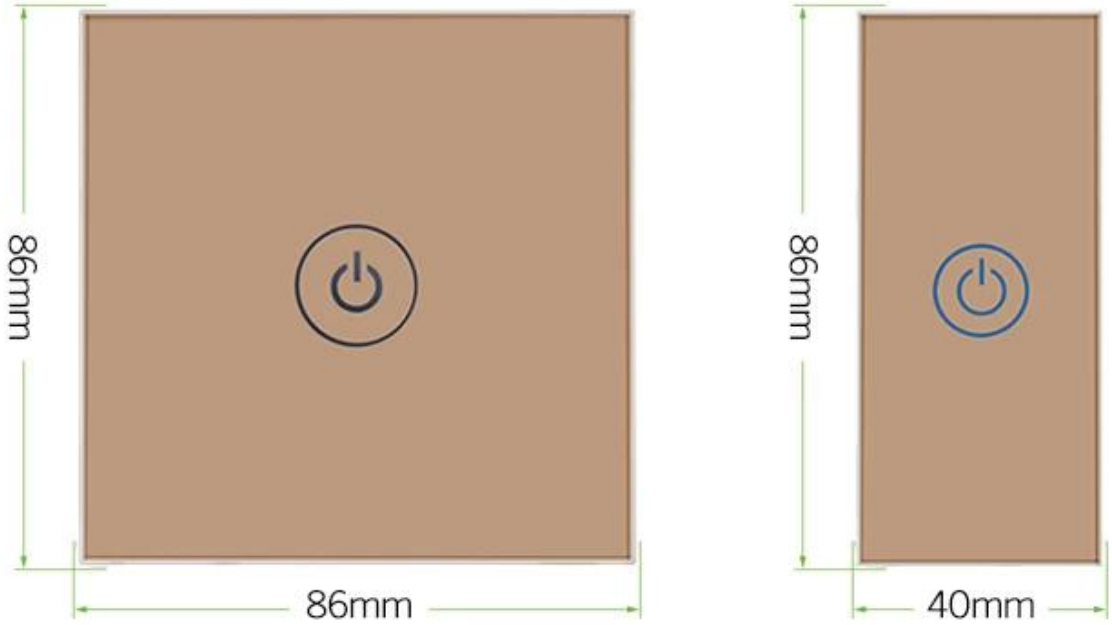

Common power supply diagram:

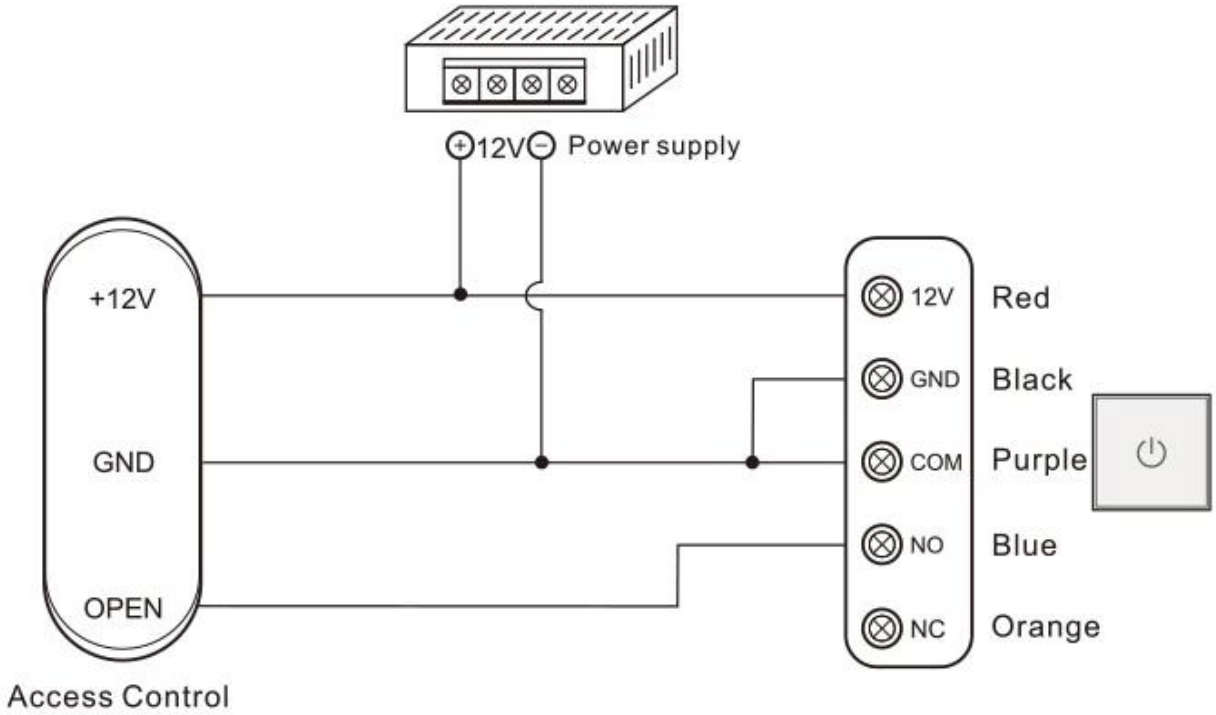

Special power supply diagram:

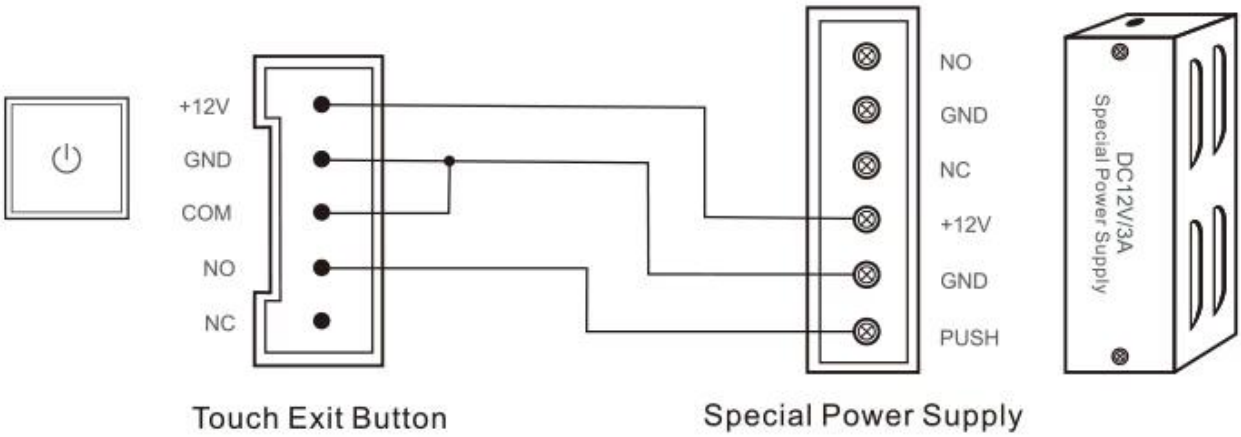

Yours may need

We can supply many kinds of door switches. Touch, No touch, glass break, key switch. Click on the

photo above to find more details. Or do not hesitate to send us a request to request the price list.

No touch Door Realese Exit Button
K2B: 86 * 86mm
No touch Door Realese Exit Sensor
K9A: 115 * 40mm
Door release button, (stainless steel,
NO / NC) K5B: 86 * 86mm

Door release button, (steel, aluminum, NO), K4B: 86 * 86mm
High quality Kirsite made of stainless steel. K14B: 86 * 86mm
PUSH door release button in stainless steel; K815B: 86 * 86mm

Our service

1, All inquiries will be answered within 24 hours
2, professional manufacturer and supplier, welcome to visit our website and factory
3, OEM / ODM available
4, high quality, fashin design, reasonable and competitive price, fast delivery time
5, after-sales service:
1), All products will have been strictly checked in house before packing
2), All products will be well packed before shipping
3), All of our products have 2-3 years warranty if the damage is not caused by man
6, faster delivery : About 1 ~ 5 days for sample order, 7 ~ 30 days for bulk order
7, payment: You can pay for the order via: T / T, Western Union, Paypal
8, Shipping: We have strong cooperation with DHL, FEDEX, TNT, UPS, EMS, Forwarder by SEA and By AIR, you can also choose your own forwarder.

FAQ

Q: 1. How can I place an order?
A: Please indicate your needs by email. Then we will send you the offer as soon as possible, after your order has been confirmed, we will arrange the production as soon as possible.

Q: 2. What about payment and shipping?
A: T / T, Paypal, Western Union.
Customers can choose by sea, air or express (DHL, FedEx, TNT UPS etc.)

Q: 3. How can I get a sample to check the quality?
A: We could provide you with free sample and the freight cost paid by you.

Q: 4. How long can I expect to get the samples?
A: It depends on the quantity. Normally 3-7 days for 5000 pieces and 7-15 days for 100,000 pieces

Q: 5. Can your products be customized?
A: Almost all of your products are customized, including material, size, thickness and printing. OEM orders are welcome.

Q: 6. Are you a trading company or a factory?
We are one of the largest manufacturers of RFID cards / NFC tags / RFID keybods / RFID bracelet, RFID reader and access control products in China for over 20 years.