Product Description

Smart door lock digital app electronic fingerprint lock

ACM-L100 is a high profit plastic Casing Fingerprint door Lock, with embedded fingerprint recognition technology. It is DIY design,which can replace knob lock easily and quickly. You even can do it by yourself. The generation fingerprint and biometric reader allows users to enter their home, office or apartment without keys.
Bluetooth Remote Control Mobile phone Opening Door Fingerprint Safe Intelligent Smart Electric Biometric Fingerprint Door Lock

Parameter Description

Parameter Description

Zinc Arilaoly Backup Vattery

Black Kolsoir Iver Finger pr 2 a 9 Capacity Passwar d C Capacity Cargo d

Chine Lsaenagnuda Engeglish

T/T, western union, alPhaymentradeassurance, Paypal

By air, by sea, by express(Fedex, DHL, UPS...)

Detailed Images

Future:

Bluetooth Remote Control Mobile phone Opening Door Fingerprint Safe Intelligent Smart Electric Biometric Fingerprint Door Lock
With the new generation fingerprint recognition algorithm
Rugged, sleek and compact design
Easy installation:No wiring .Fits door widths 1 3/8" to 2 3/8".Single latch and reversible handle disign
Idle handle design to prevent from forcible entry

Infrared sensor–Touch to open
LED indicator and inbuilt buzzer
External terminals to draw back-up power from a 9V battery
Low battery warning
Normal Open mode
3 user groups - Admin, Normal User and Temporary User

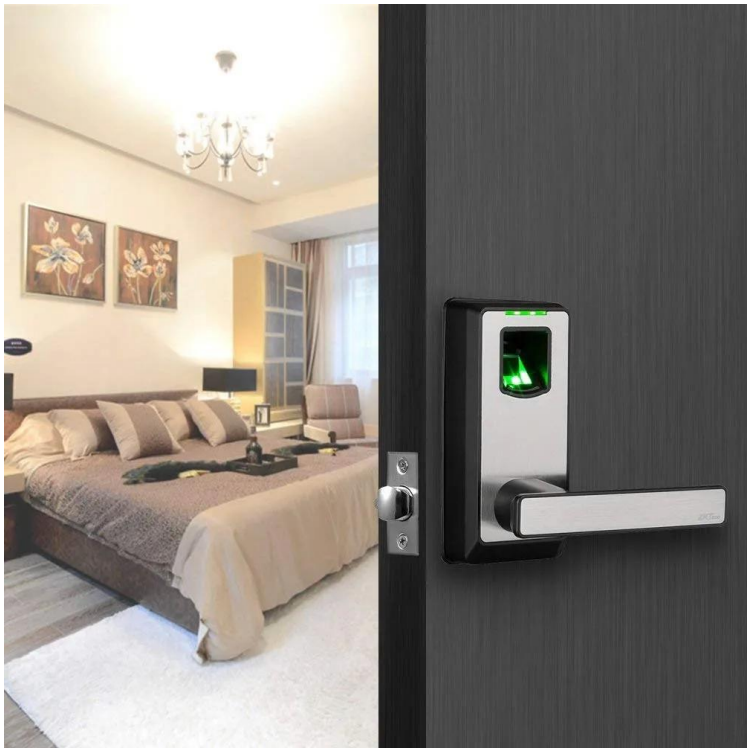

Only for single bore doors.Need to drill 1 additional holes

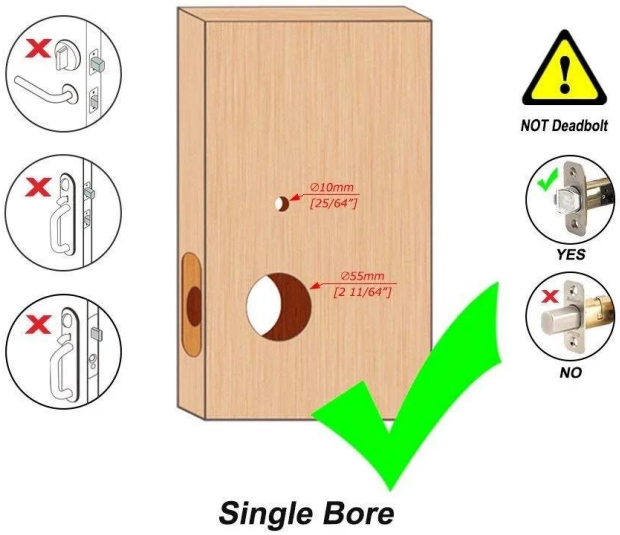

Single Bore

1.02 "
26mm
1.18 " - 2.12 "
30mm-54mm
1.38 "
35mm
6.10 "
155mm
6.10 "
155mm

Idle Handle Design
Idle handle design to prevent from forcible entry.
Handle,latch and strike is reversible design for all door open direction.

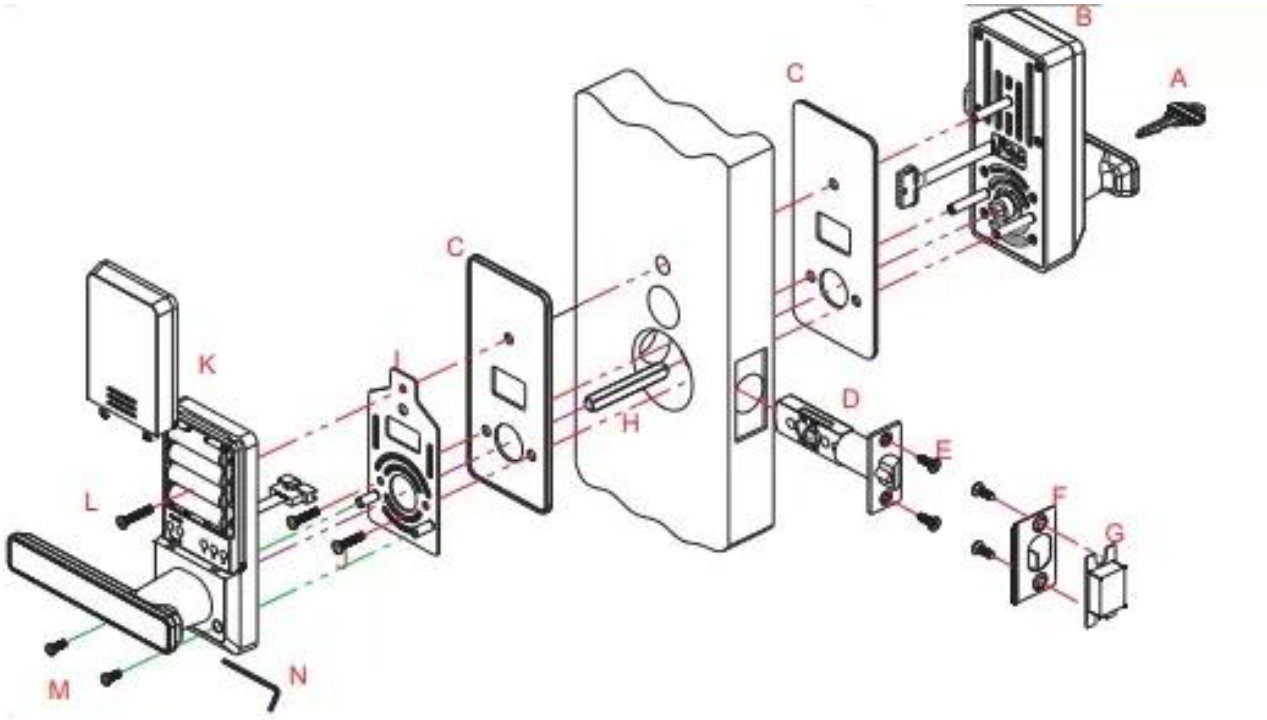

Packing & Delivery

Shipping Way (Just for new customers reference)

We are one of the leading exporter of RFID products in China since 2000 years . With rich international trade experience we know the international shipping very well , We know which express or air/sea line is cheap and safe to your country . We can supply various certificate for you to clean your custom to such as CO , FTA , Form F , Form E ...Ect . We wil provide our professional suggestion for your shipping . EXW , FOB , FCT , CIF , CFR ...trade term are ok for us . We can be your reliable partner for products and shipping .

Related Products

ACM-8011-3Y

RFID smart door lock

ACM-L100

Smart fingerprint door lock

ACM-S600

Economic fingerprint door lock

ACM-M100

Face recognition Fingerprint door lock

ACM-TI100

High quality fingerprint door lock

ACM-L200

Fingerprint RFID door lock

Our Service

1, Any inquires will be replied within 24 hours
2, Professional manufacturer and supplier, Welcome to visit our website and our factory
3, OEM/ODM Available
4, High quality, fashin desing, reasonable & competitive price, fast lead time
5, After-sale Service :
1), All products will have been strictly quality checked in house before packing
2), All products will be well packed before shipping
3), All our products have 2-3 year warranty if the damage is not caused by human
6, Faster delivery : Around 1~ 5 days for sample order, 7~30 days for bulk order
7, Payment : You can pay for the order via : T/T, Western Union, Paypal.

8, Shipping: We have strong cooperation with DHL, FEDEX, TNT, UPS, EMS, Forwarder by SEA and By AIR, You also can choose your own shipping forwarder.

FAQ

Q: 1. How can I place an order?
A: Please list your requirement to us via email. Then we will send the offer to you at earliest time,after order confirmation, we will arrange production ASAP.

Q: 2.What about the payment and shipment?
A: T/T ,Paypal, Western Union.
Clients can choose by sea, air or express(DHL, FedEx, TNT UPS etc.)

Q: 3. How can i get a sample to check your quality?
A:We could provide free sample to you, and the freight cost payed by you.

Q:4. How long can I expect to get the samples?
A: It depends on the quantity. Normally 3-7 days for 5000pcs and 7-15 days for 100,000pcs

Q:5. Can your products be customized?
A: Almost all of your products are customized ,including the materia, size, thickness and printing. OEM orders are highly welcome.

Q:6.Are you a trading company or factory?
We are the one of the biggest manufacturer of RFID cards/NFC tags/RFID keybod /RFID wristband□rfid reader and access control products in China more than 20 years.