Supply power	AC/DC 12V~36V
Static parameter	DC12V 22mA
Action current	DC12V 55mA
Transmit distance	1~15CM adjustable
Operation Frequency	38KHZ
Working environment humidity	-20℃~45℃
Dimension	113x63x20mm
Fixed way	Fixed with hidden screw
Total Weight	108G

Dimensions(mm)
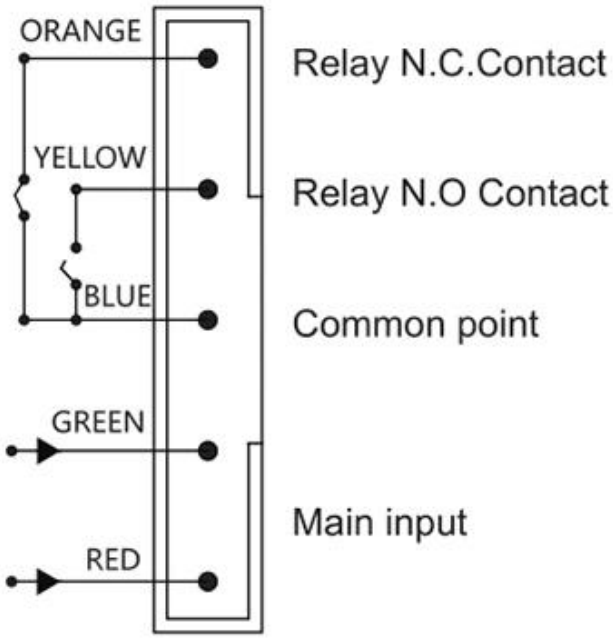
Orange	NC
Yellow	NO
Blue	COM
Green	AC/DC 12V~36V
Red