Pro

12V 5A output access control power supply with LED indicator

5A Current power supply

Built-in reverse surge protection and Short-circuit protection function.

This power supply is suitable for building intercom, various entrances access control, particularly suitable for all kinds of electric locks

Product Description

Dest ri ip2 i on r, get in by card and get out door by exit button

Product Size 213*172*7mm

Input Voltage AC11V-24V

English Maghuah

Output current 5W

Detailed Images

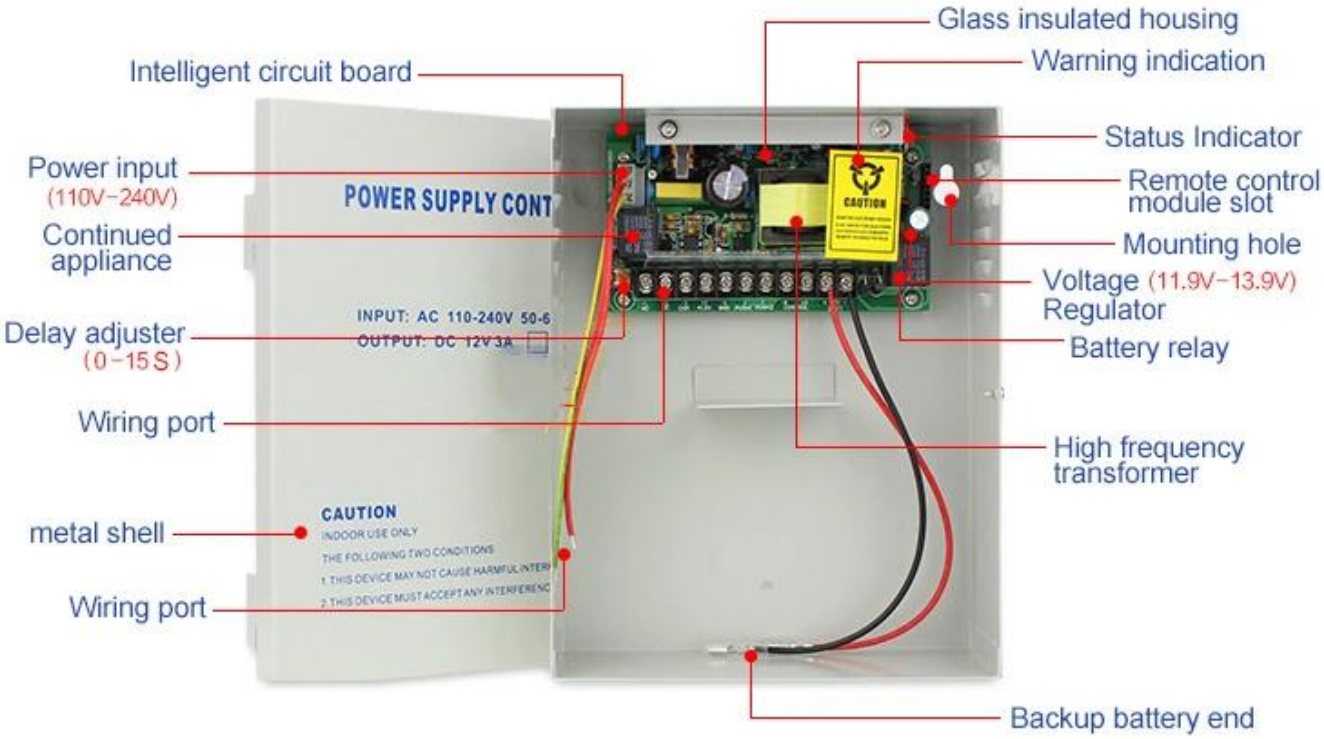

External terminal

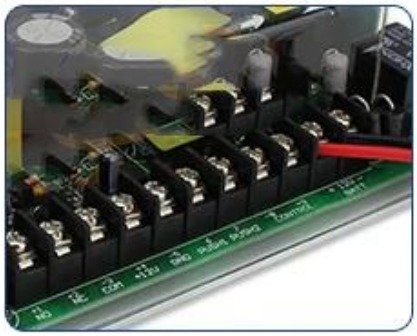

External wiring port for easy wiring, easy to use, save installation time

Remote control module slot

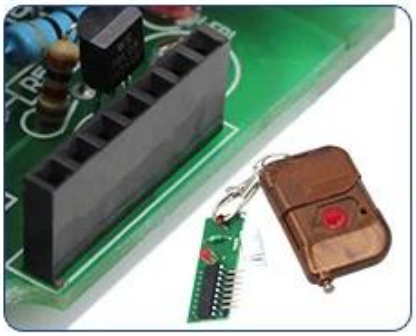

The access control power board slot design can insert the remote control module into the slot and unlock it with one button.

For strong current

Ordinary access control power supply provides 1.5-1.8A current output, 208K 5A access control power supply provides 5A current output

Application

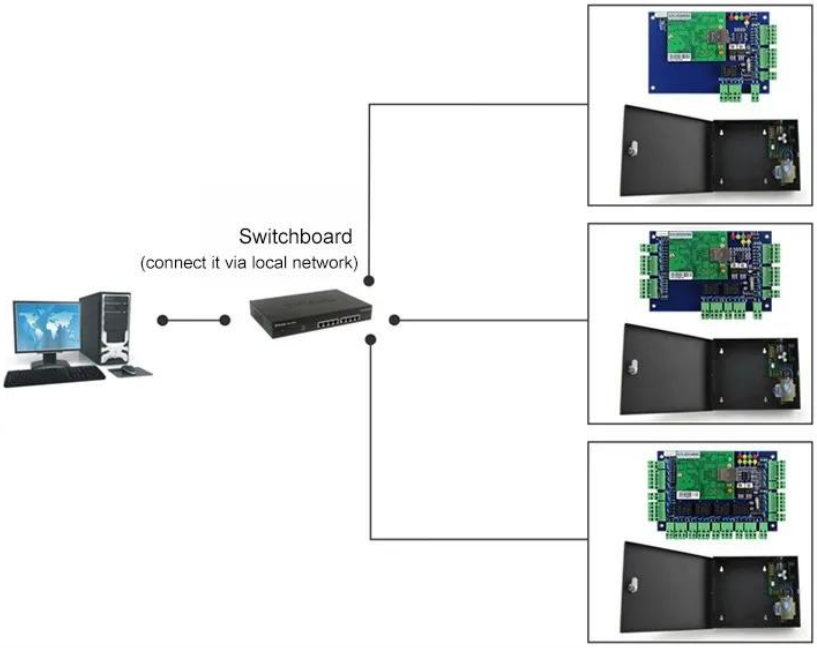

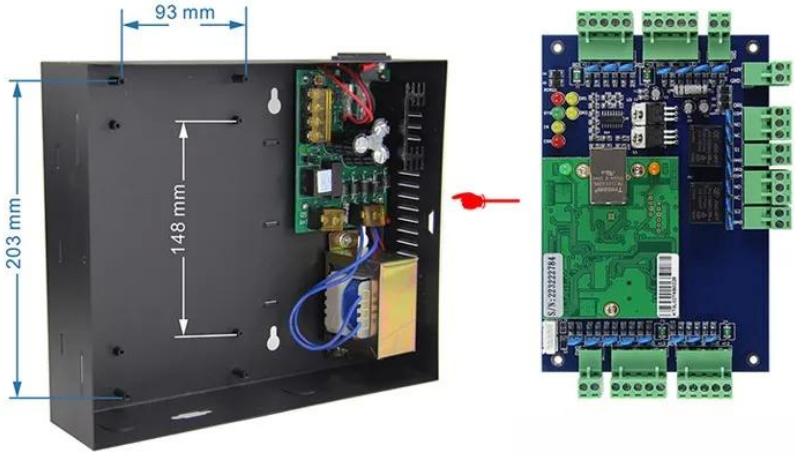

Kindly remind:

All network control board must configure with access power supply.
1 board for 1 power supply

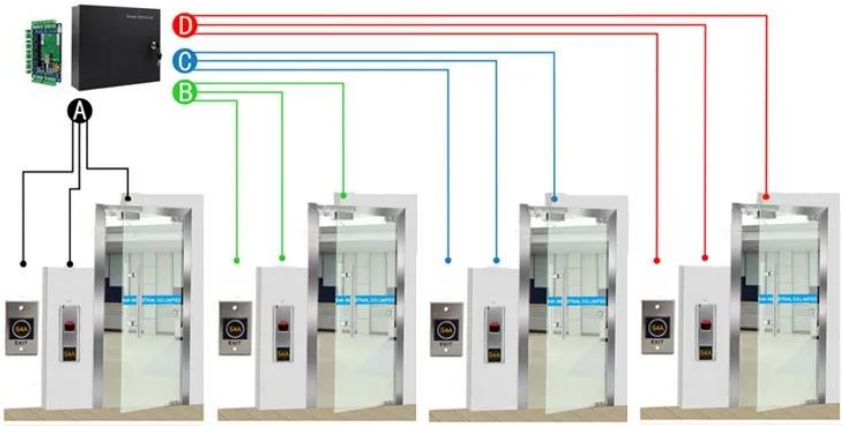

ACM-WEG04

Four doors 1 way: Control 4doors (Enter by Swipe cards and Exit by Push button)

Scope of Application

Packing & Delivery

Every order we will check the quality firstly to ensure our customer get the best product.
Our staff will pack it carefully to avoid the damage of transportation.
We will ship every goods out as soon as possible.

Shipping Way (Just for new customers reference)

We are one of the leading exporter of RFID products in China since 2000 years . With rich international trade experience we know the international shipping very well , We know which express or air/sea line is cheap and safe to your country . We can supply various certificate for you to clean your

custom to such as CO , FTA , Form F , Form E ...Ect . We wil provide our professional suggestion for your shipping . EXW , FOB , FCT , CIF , CFR ...trade term are ok for us . We can be your reliable partner for products and shipping .

Click here to order and have your FREE SAMPLE in 3 days!!!

We are professional comprehensive security access control products supplier with 20 years experience, we make sure to offer the best solution of access control system solution! So, send your inquiry details in the below, click "Send" now!
We are looking forward to forming successful business relationships with new clients around the world in the future.

Related Products

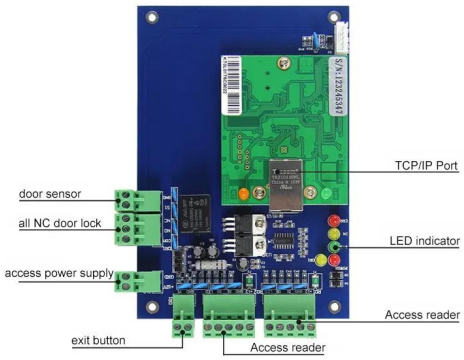

ACM-WEG01

It can control 1 door.

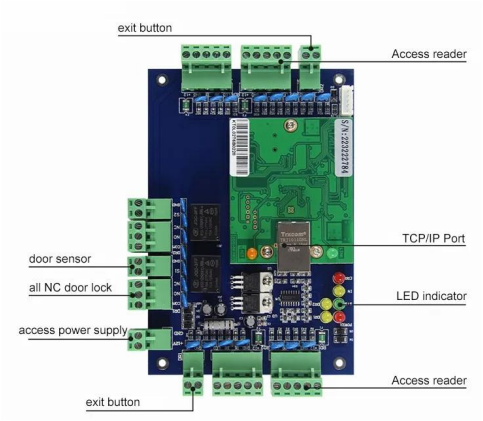

ACM-WEG02

It can control 2 door.

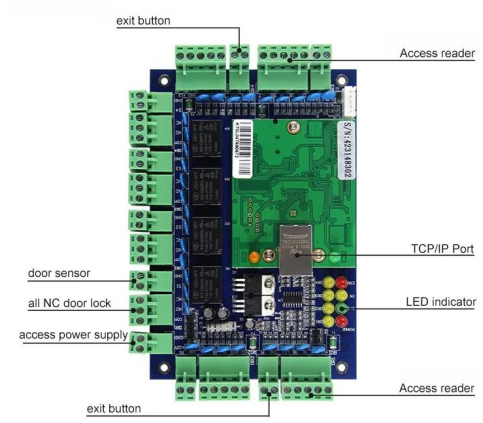

ACM-WEG04

It can control 4 door.

You May Like

ACM-K2A/B

No touch Door Realese Exit Button with led

ACM-Y280

Surface mounted magnetic lock (280kg/600lbs)

ACM-Y806-5A

Power supply 5A for access control

ACM225

Touch Keypad RFID Access Control
12khz

ACM-210

Metal Waterproof RFID Wiegand
Access Control

ACM26X

125Khz EM Card RFID Reader Size:
115mm×75.5mm×16.8mm

Our Company

ACM Shenzhen Goldbridge industrial company

As a one of leading exporter of RFID products in China , we have been in this field for 20 years already . We have rich production and exportation experience on RFID products . Our strength products are : RFID card , RFID keyfob , RFID wristband , RFID tag and various RFID reader . We are also the access control solution provider.

Our Service

Your satisfactory is our goal.

1.Any inquires will be replied within 24 hours
2. Professional manufacturer and supplier, Welcome to visit our website and our factory
3.OEM/ODM Available
4. High quality, fashin desing, reasonable & competitive price, fast lead time

5.After-sale Service :
A:All products will have been strictly quality checked in house before packing
B: All products will be well packed before shipping
C:All our products have 2-3 year warranty if the damage is not caused by human
6. Faster delivery : Around 1~ 5 days for sample order, 7~30 days for bulk order
7. Payment : You can pay for the order via : T/T, Western Union, Paypal, Ali trade assurance
8.Shipping: We have strong cooperation with DHL, FEDEX, TNT, UPS, EMS, Forwarder by SEA and By AIR, You also can choose your own shipping forwarder.

Quality Warranty

1.Warranty Service will be honored if the damage is not caused by human, ACM Goldbridge provides 2 years warranty for relative products.
2.On the contrary, ACM Goldbridge will charge extra if repair.
3. More information, please browse our service center.

Our Contact

Contact us

Please send us inquiry and order now to have your FREE SAMPLE in 3 days!!!
We are professional to offer best solution of comprehensive security rfid card access control products supplier with 20 years experience,

So, Contact us and send your inquiry details in the below now!
We are looking forward to forming successful business relationships with new clients around the world in the future.