Bluetooth Outdoor Metal RFID PIN Keypad Access Controller

Convertible working modes, more possibilities . Standalone mode, controller mode, Reader Mode .

It is a widely used access control system entrances and exits at offices, factories, hotels, schools and other public places.All input/output uses anti-jamming protection and over-voltage/circuit protection.

Advantage

Bluetooth Metal Access Control
* Waterproof, conforms to IP66
* One relay, 1000 users
* Wiegand 26~37 bits input & output
* User data can be transferred by Wiegand line
* Access modes: Card, PIN, Card + PIN, Multi Cards/PINs, Mobile phone
* PIN length: 4~6 digits
* Pulse mode, toggle mode
* 2pcs device support interlock for two doors
* With Bluetooth, APP configuration

Product Show

Various ways to open door
make easy and safe entrance

Pressing a button, door opens!

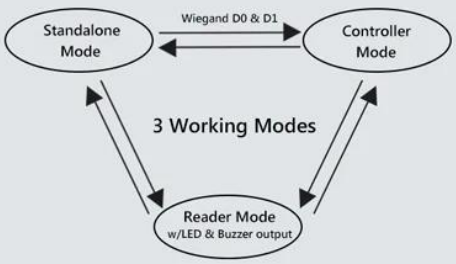

Convertible working
modes,more possibilities.

All key is metal, with hidden key frame

Wide Voltage Range:

12 ~ 28

VOLTS VOLTS

Detailed Image

Supports Wiegand 26/34 output, can be used as a card reader door access control

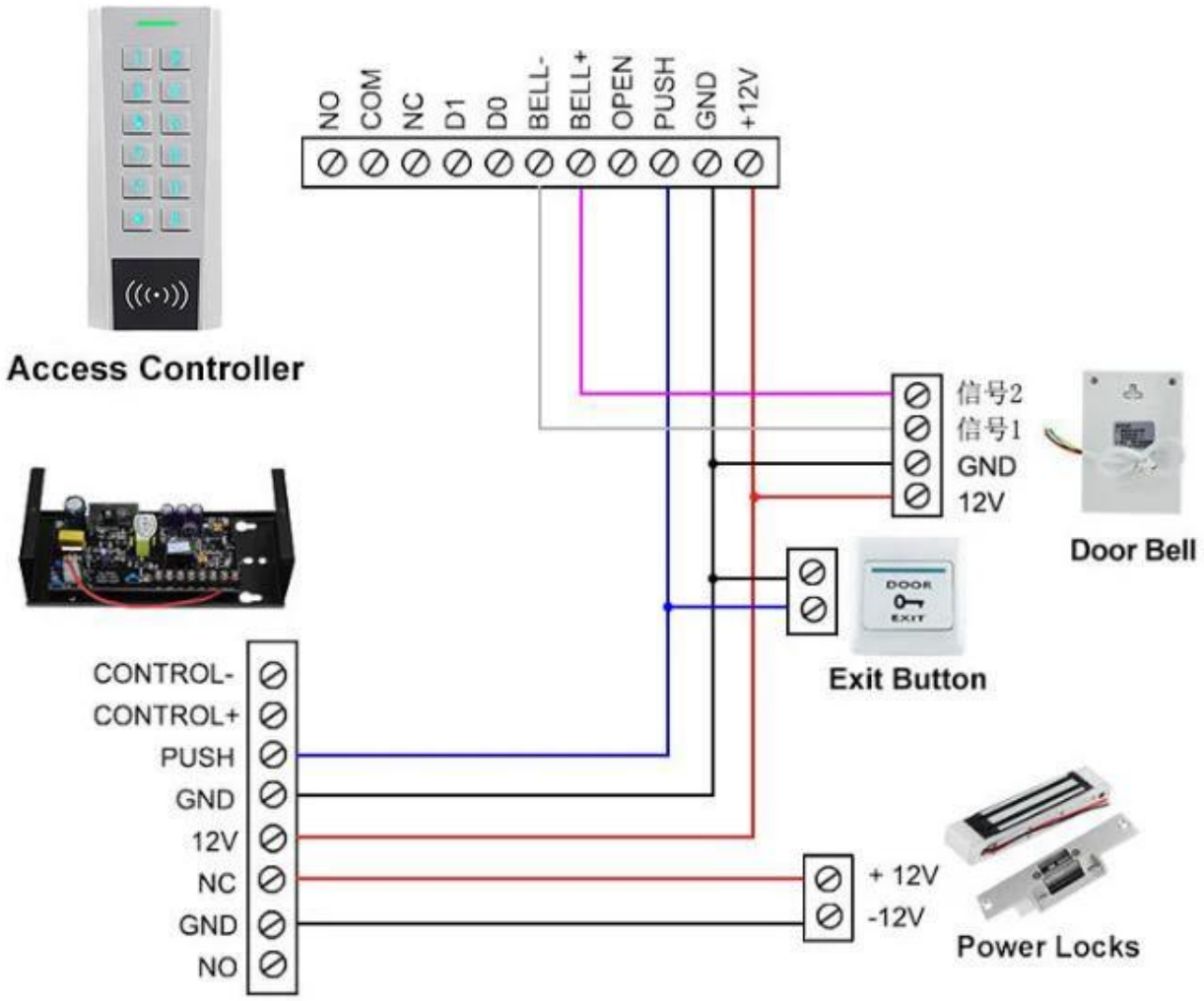

You might like

We are manufacturers of professional access control, we have a complete product access control system as follows:

ACM223

RFID touch keyboard and keyboard access control, capacity EM 125/4000 US 125Khz

ACM209-NW

Keyboard Access control to a metal RFID (not waterproof) door, 125Khz EM

ACM208

RFID reader with single waterproof door and access control

ACM210

Access control with single RFID metal door (not waterproof)

ACM225

RFID touch control access control, 125Khz EM, can connect the wiegand reader

ACM211B

Touch keypad Metal case Waterproof RFID access control, Can connect the wiegand reader

Our service

1, all questions will be answered within 24 hours
2, professional manufacturer and supplier, welcome to visit our website and our factory
3, OEM / ODM available
4, high quality, fashin desing, reasonable and competitive price, quick delivery time
5, after-sales service:
1), all the products will have been strictly checked at home before packing
2), all products will be well packed before shipment
3), All our products have a 2-3 year warranty if the damage is not caused by human being
6, faster delivery : About 1 ~ 5 days for sample order, 7 ~ 30 days for bulk order
7, payment: You can pay for the order via: T / T, Western Union, Paypal, Ali commercial insurance
8, shipping: We have a strong partnership with DHL, FEDEX, TNT, UPS, EMS, freight forwarder by sea and by air, you can also choose your freight forwarder.

FAQ

Q: 1. How can I place an order?
A: List your needs by e-mail. Then we will send you the offer as soon as possible, after order confirmation, we will organize the production as soon as possible.

Q: 2. What about payment and shipping?
A: Commercial warranty and T / T, Paypal, Western Union.
Customers can choose by sea, air or express (DHL, FedEx, TNT UPS etc.)

Q: 3. How can I get a sample to check the quality?
A: We could supply you free sample and the freight cost paid by you.

Q: 4. How long can I wait to get the samples?
A: it depends on the quantity. Normally 3-7 days for 5000 pieces and 7-15 days for 100,000 pieces

Q: 5. Can your products be customized?
A: Almost all your products are customized, including material, size, thickness and printing. OEM orders are welcome.

Q: 6. Are you a trading company or factory?
We are one of the leading manufacturers of RFID cards / NFC tags / RFID keybod / RFID reader RFID reader and access control products in China for over 20 years.