Pr

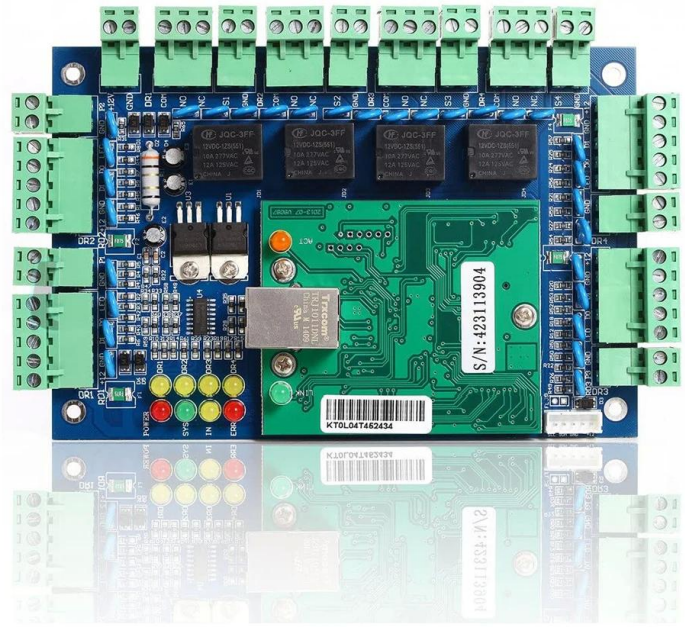

Entry Door Security System Wiegand Solution Controller Board TCP IP RFID Network Two Door Access Control Panel

This access control board's software provides numerous access control and alarm monitoring features: expiry date for clubs,
automatic activation, time zones, supervision, anti-passback, activity reports...
Each alarm input is programmable: operating mode (NO or NC), time zones, local reflex (activation of outputs according to input status). Specific alarms are triggered according to the number of unsuccessful attempts, the time limit for door closing (door alarm), the duress code...Whenever required, the data stored in the controllers is transferred to the computer and activity reports are printed. Each controller works independently and keeps its own database.

Parameter Description Model Use Eyeont Buffer Dewe6 VC14r4 Vt Rated Max. 1A

Read 26 Port Wiegand, 8 bit Burst for PIN) Women and 26 bit Wiegand 34 TCP/IP

Baud Rates (Recommended) / 96 bps, 19,2 bps, 57,6 bps (selectable)

6 Ea(uExit Button#1, Exit Button#2, Door Sensor#1, Door Sensor#2, Aux#1, Aux#2)

Data (p2 FORM - CRelayOutput, SPDT5A@36VDC/8A@3VAC)2ea(2AuxFORM-CRelayOutput, SPDT2A@3VDC)

Yes, the Dicatio for communication, power, status and punch card Oper 55 Cing Temperature

Operation Humidity non-condensing

D
i
8
m
e
W
s
r
1
0
6
(
H
*
(
W
s
i
m
m
g
l
e
b
o
a
r
d
)
3
4
5
(
W
)
*
2
7
5
(
H
)
*
7
(
D
)
(
w
i
t
h
p
o
w
e
r
s
u
p
p
l
y
a
n
d
m
e
t
a
l
b
o
x
)

CE FC RoHS

Detailed Images

Hardware:
1. Support 4 doors--Door with four readers and two push button interface.
2. With door sensor for door
3. Relay output for use with Normally Open and/or Normally Closed type locks.
4. Can Opeate off-line and real-time monitoring.
5. 100,000 events can be stored.(off-line), Can store unlimited events to PC.
6. 40,000 users can be registered.
7. Network communication using TCP/IP 10M/100M adaptive.
8. Expandable to use unlimited number of controllers.

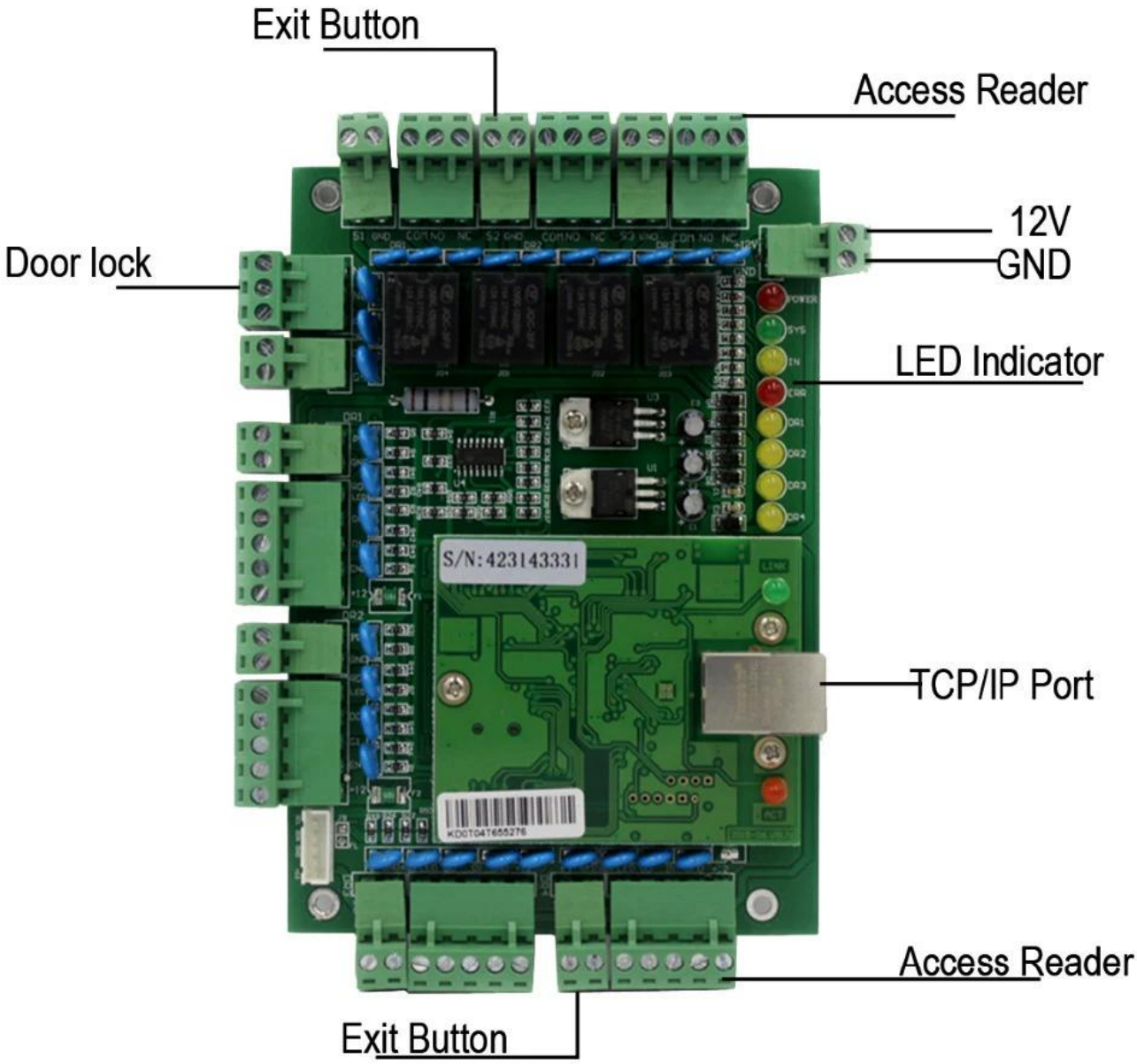
Exit Button
Access Reader
12V
GND
Door lock
LED Indicator
TCP/IP Port
Access Reader
Exit Button
S/N:423143331

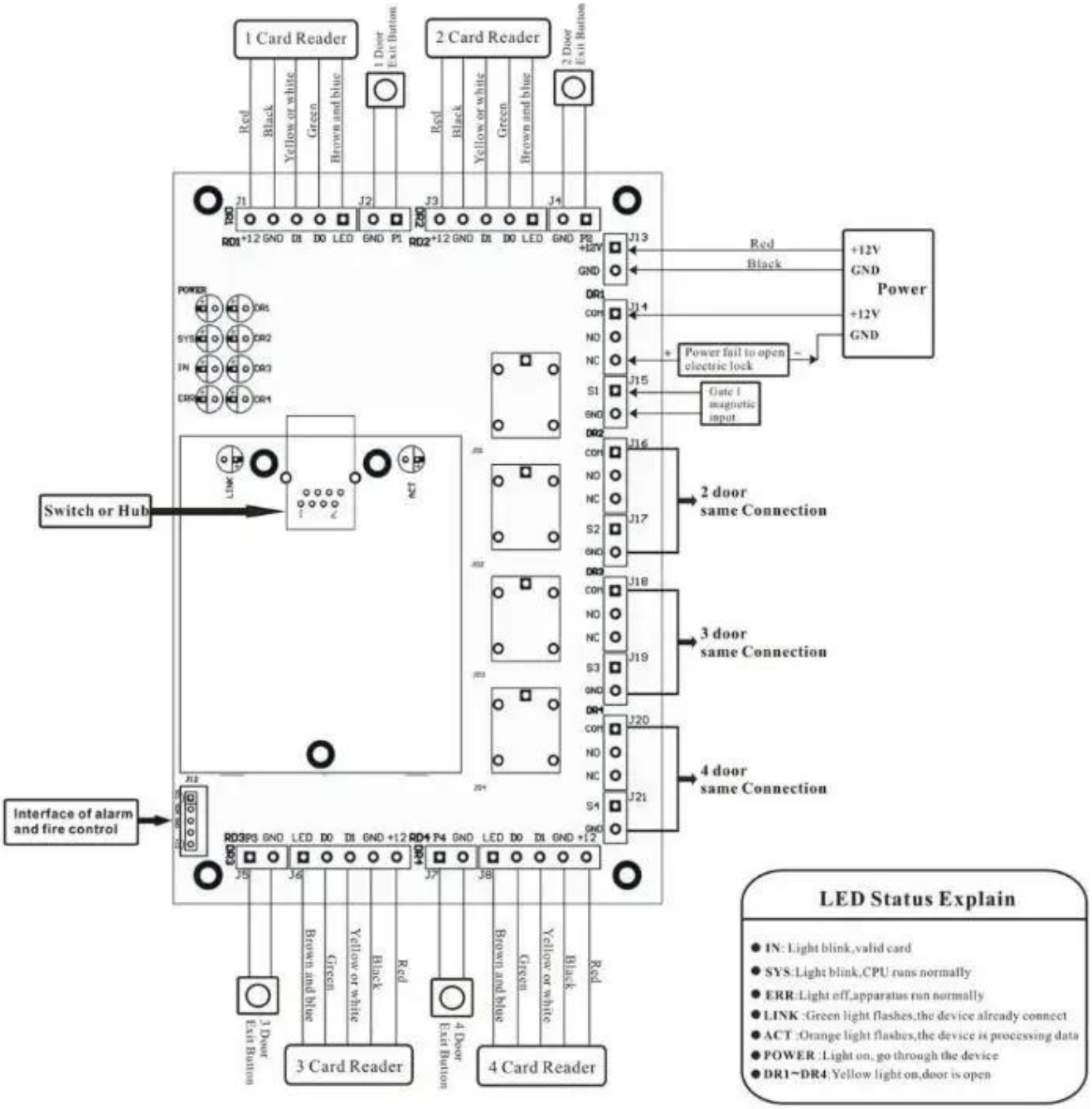

Application

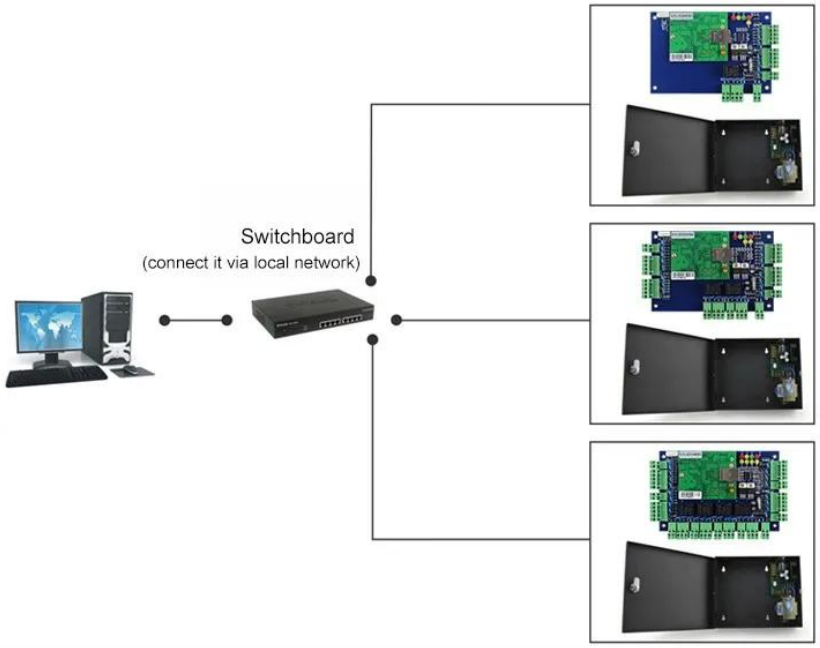

Kindly remind:

All network control board must configure with access power supply.
1 board for 1 power supply

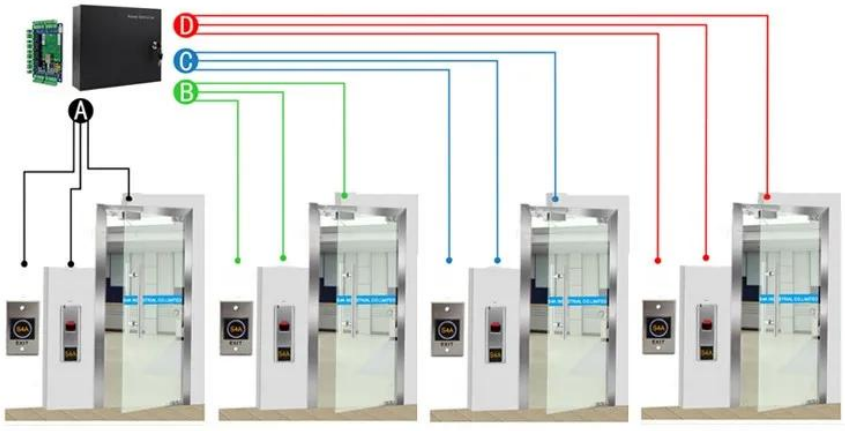

ACM-WEG04

Four doors 1 way: Control 4doors (Enter by Swipe cards and Exit by Push button)

Packing & Delivery

Every order we will check the quality firstly to ensure our customer get the best product.Our staff will pack it carefully to avoid the damage of transportation.We will ship every goods out as soon as possible.

Shipping Way (Just for new customers reference)

We are one of the leading exporter of RFID products in China since 2000 years . With rich international trade experience we know the international shipping very well , We know which express or air/sea line is cheap and safe to your country . We can supply various certificate for you to clean your custom to such as CO , FTA , Form F , Form E ...Ect . We wil provide our professional suggestion for your shipping . EXW , FOB , FCT , CIF , CFR ...trade term are ok for us . We can be your reliable partner for products and shipping .

Our Service

Your satisfactory is our goal.

1.Any inquires will be replied within 24 hours
2. Professional manufacturer and supplier, Welcome to visit our website and our factory
3.OEM/ODM Available
4. High quality, fashin desing, reasonable & competitive price, fast lead time
5.After-sale Service :
A:All products will have been strictly quality checked in house before packing
B: All products will be well packed before shipping
C:All our products have 2-3 year warranty if the damage is not caused by human
6. Faster delivery : Around 1~ 5 days for sample order, 7~30 days for bulk order
7. Payment : You can pay for the order via : T/T, Western Union, Paypal, Ali trade assurance
8.Shipping: We have strong cooperation with DHL, FEDEX, TNT, UPS, EMS, Forwarder by SEA and By AIR, You also can choose your own shipping forwarder.Your satisfactory is our goal.

Quality Warranty

1.Warranty Service will be honored if the damage is not caused by human, ACM Goldbridge provides 2 years warranty for relative products.
2.On the contrary, ACM Goldbridge will charge extra if repair.
3. More information, please browse our service center.

Related Products

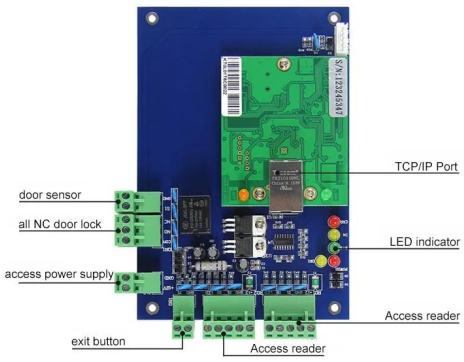

ACM-WEG01

It can control 1 door.

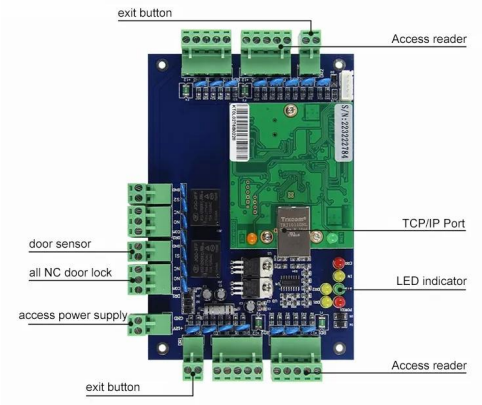

ACM-WEG02

It can control 2 door.

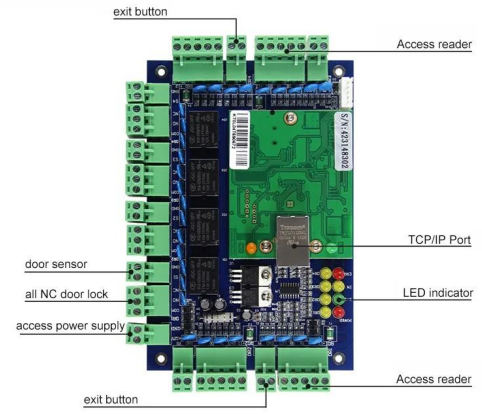

ACM-WEG04

It can control 4 door.