Product Description

Access Control 12V 3A Switching Power Supply

Key Functions:
It controls electric lock directly.
Can reduce the load of access controller, save wiring to reduc the hidden trouble
Set NC / NO outputs, can control various types of electric locks
Based delay control circuit, lock time can be in 0-15 seconds
Automatic protection function, unexpected situations such as
when the power supply short-circuit occurs, the power may be
temporarily disconnected or the fuse auto insurance line off
Operative device: E/M Lock, Access Controller, Exit Push Button

Key Specification:
AC input: Standard AC110V-260V(12V3A)
DC output: Stabilivolt DC12V/ 3A

Include:
1 x Access Control Power Supply

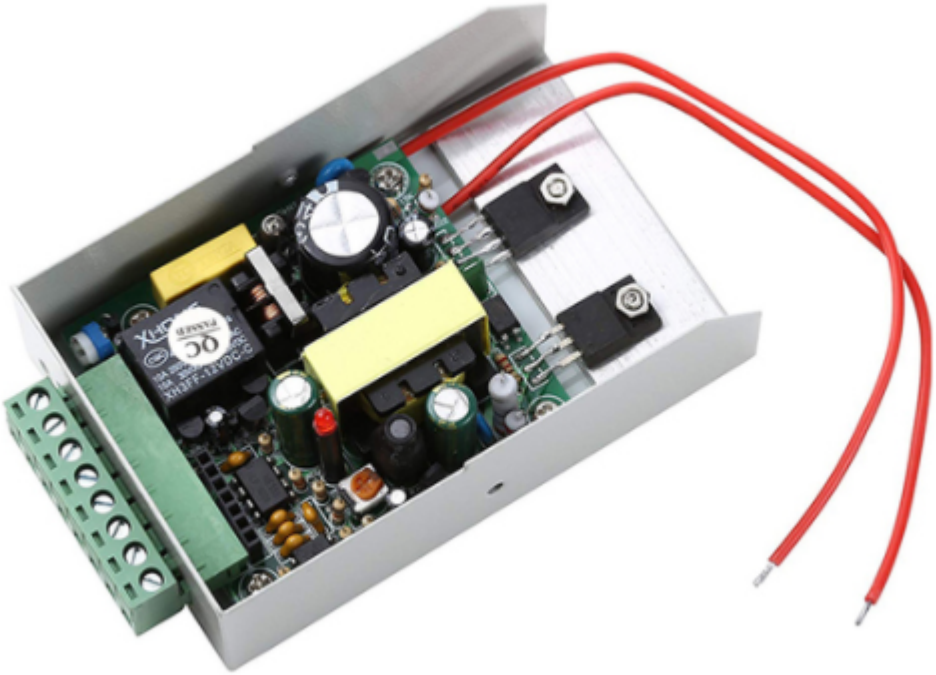

Model	K80
Input Voltage	AC110-240V
Output Voltage	DC12V
Output Current	3A
Power	30W
Lock Voltage	DC12V. NO or NC
Time delay	0-15S
Dimension	104 X 69 X 33mm
Weight	0.32KG

10.5cm
3.4cm
7cm
POWER SUPPLY CONTROL
INPUT: AC110-240V 50-60HZ
OUTPUT: DC12V 3A
AC110-240V
POWER
CONTROL-
CONTROL+
PUSH
GND
+12V
-COM
+NC
+NO
Time

Metal Shell

Stylish & Simple Metal Case, Compact Size, Safe & Convenient To Use

Delay Adjustment

Power Supply With Delay Design 0-15 Seconds Adjustable

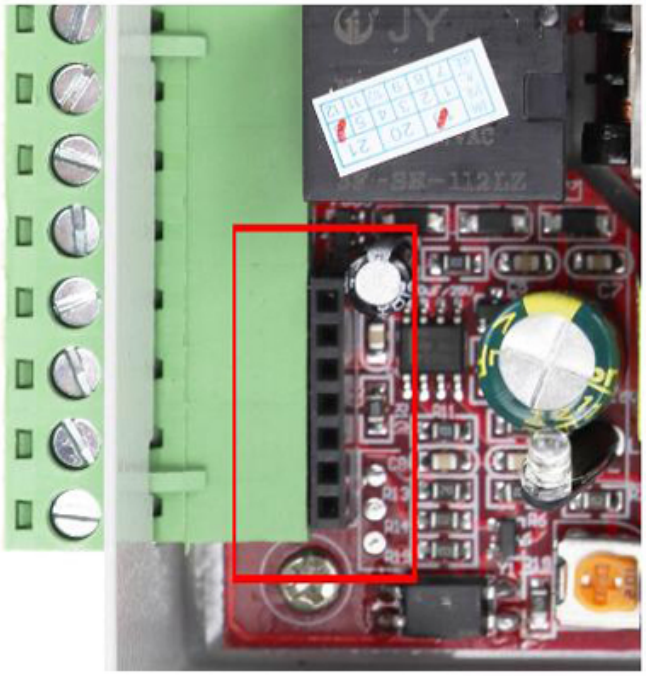

Module Slot

Access Control Power Supply
Built-In Module Slot Pluggable
Remote Control Module

Safety Device

Each Power Interface Is Designed with A Fuse Device. When The Voltage Is Too High, It Will Automatically Power Off & Be Safer To Use.

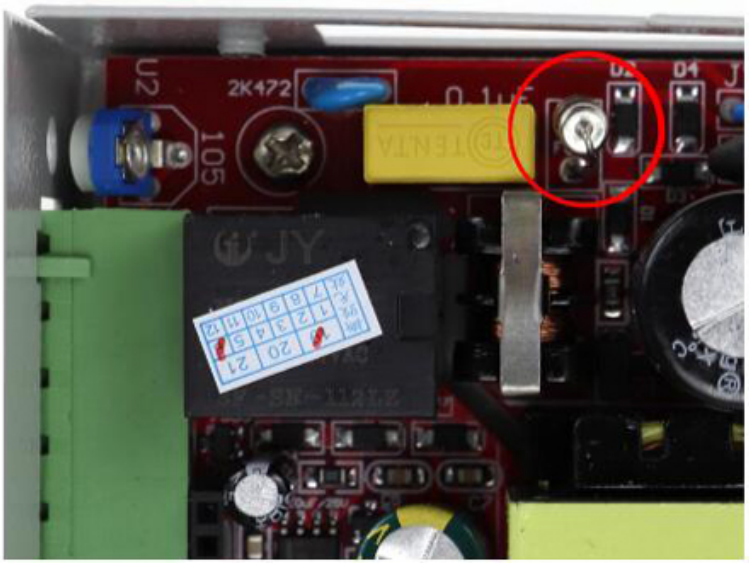

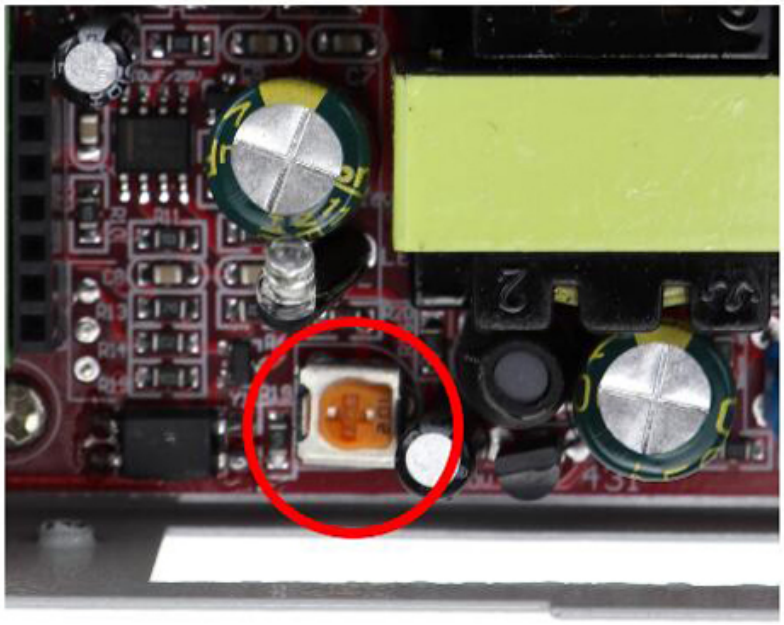

Voltage Regulation

12V Output Adjustable 9-14V Adjustable

Capacitance

With Battery Depletion Protection & Dual Relay Design

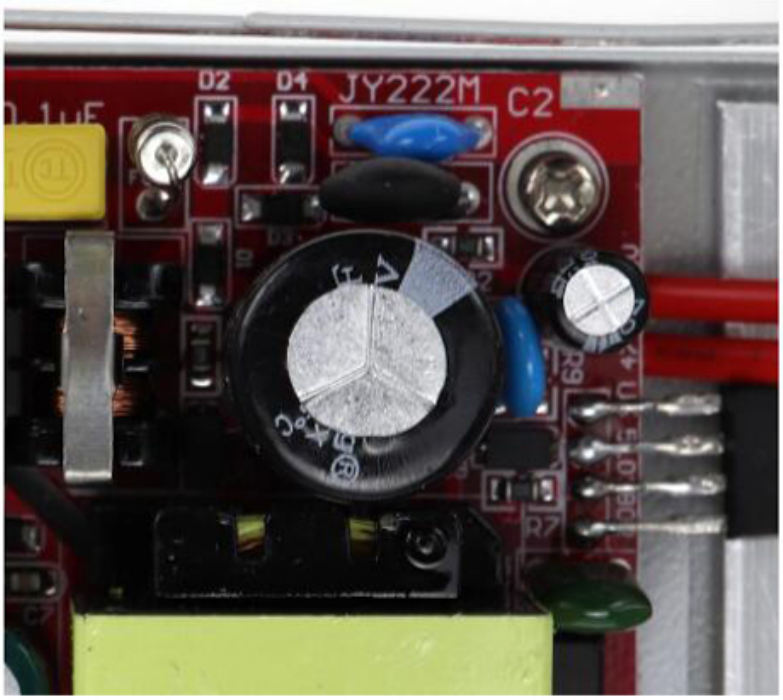

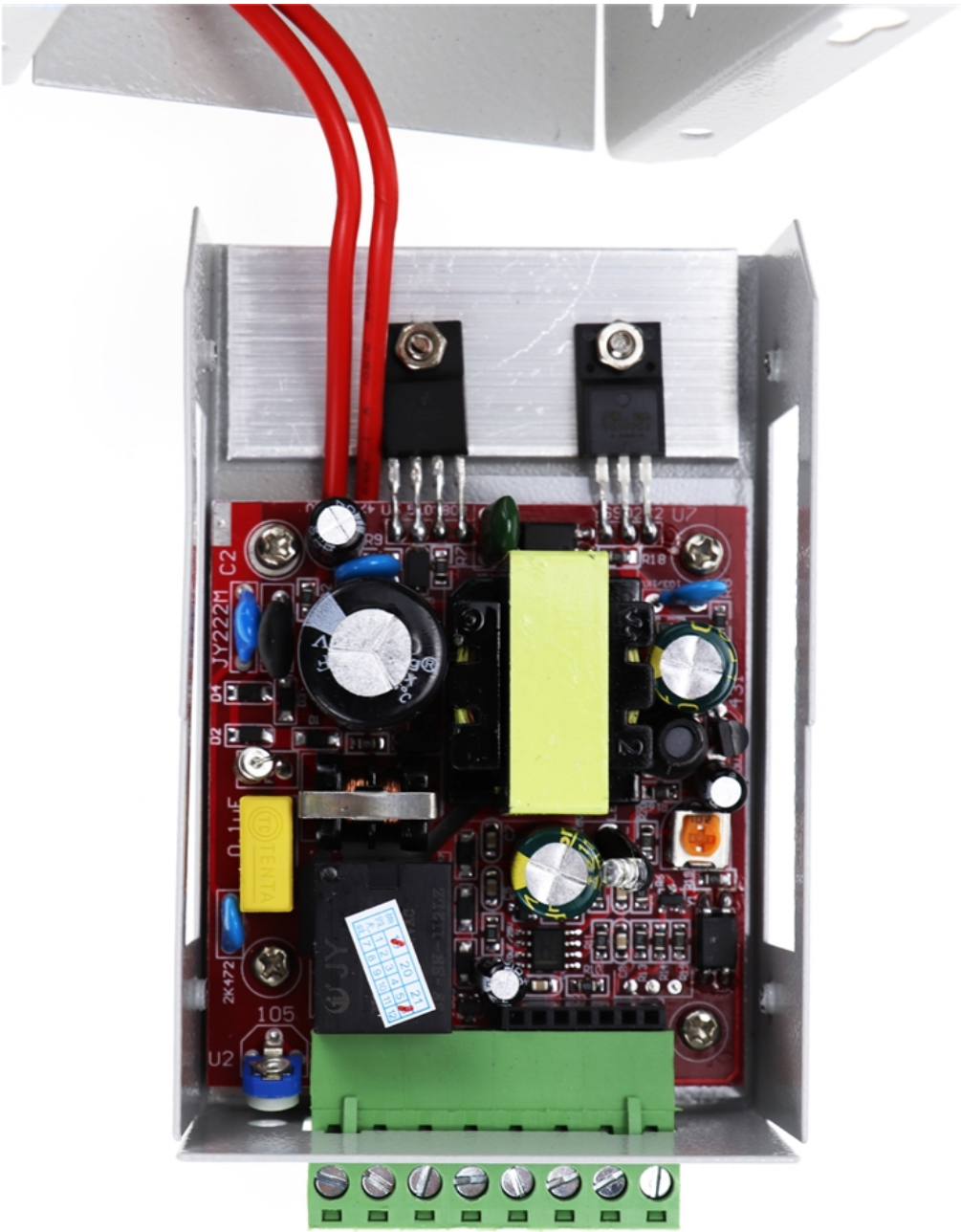
JY222M
C2
D4
D2
0.1uF
2K472
105
U2
R9
R18
U7

POWER SUPPLY CONTROL
INPUT: AC110-240V 50-60HZ
OUTPUT: DC12V 3A
AC110-240V
POWER
CONTROL-
CONTROL+
PUSH
GND
+12V
-COM
+NC
+NO
Time

Production Workshop

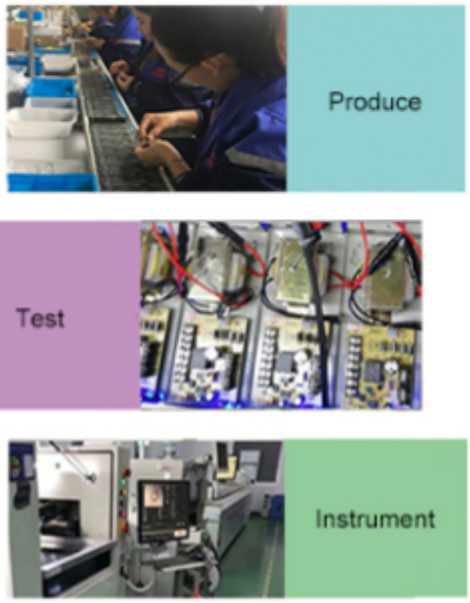

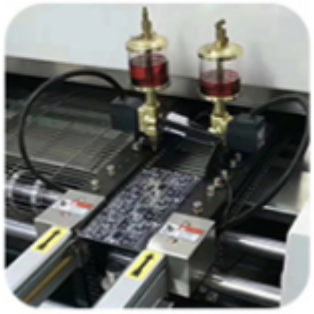

Related Products

Access Contrkol Management

SHENZHEN GOLDBRIDGE INDUSTRIAL CO.,LTD

Door Loop / Closer/ Holder & Power Supply- Distributor Wholesale

RE:Access Control Power Supply

ACM-Y802-3A
Power Supply and door release exit button Dual Function
AC110V-240VDC, 12V 3A

M801B-3A /5A
Access Control Door Power Supply
Size: 190Lx85Wx80H(mm)
AC110V-240VDC

M806B-3A /5A
Access Control Door Backup battery Power Supply
Size: 190Lx85Wx80H(mm)
AC110V-240VDC

ACM-Y803A
Voltage: DC 12V /3A

ACM-Y806-3A
Voltage: DC 12V /3A
AC110V-240VDC

ACM-Y806-5A
Voltage: DC 12V /5A
AC110V-240VDC

ACM-Y801-3A
Voltage: DC 12V /3A
AC110V-240VDC

ACM-5A
12V 5A door control system 12V 5amp access power supply with battery backup
(Special For access control board use)
Size: 279x234x67MM
Input Voltage:110-240V
Voltage: DC 12V /3A

RE:Door Loop / Door Closer

ACM401 Door Loop

ACM601F 200mm Metal
ACM601S 200mm stainess steel

ACM-101 130mm Longer
ACM-102 180mm Longer

ACM-301 400mm Longer

ACM-201 400mm Longer

Door Closer
ACM-M59 25-45KG
ACM-M60 45-65KG
ACM-M61 65-85KG

RE:Sensor and Siren For Access Control System

Item: AS603
Piezo Strobe Siren
Operating voltage: 12VDC

Item: AS31
Operating distance: 16mm
±5mm Switch output: NC

Item: AS32
Operating distance: 18mm
±5mm Switch output: NC

Item: AS36
Operating distance: 40mm
±10mm Switch output: NC

Item: AS57AC
Operating distance: 18mm
±5mm Switch output: NC
Applies to steel door

Door Holder

Item: ACM-MD601
Standard Wall Mount Door Holder
Holding force: 60kg(120Lbs)

Item: ACM-MD602
Glass door Mount Door Holder
with door signal
Holding force: 60kg(120Lbs)

RE:Remote Control For Access Control System

Item: ACM-K19
Metal WIRELESS Remote Control

Item: ACM-K18
WIRELESS Remote Control

Item: ACM-K20
WIRELESS Remote Control For Automatical Door,NO/NC/COM
115*40mm

Item: ACM-K19A
Metal Access Control WIRELESS Remote Control 2 channel

Item: ACM-K19B
Metal Access Control WIRELESS Remote Control 4 channel

Whatsapp: +86-14554918707 , E-mail: lilyjiang_06@163.com, sales@goldbridgesz.com ; www.goldbridgesz.com

For More Proudcts Price List and informations , Please contact our sales at sales@goldbridgesz.com, thank you !

Application

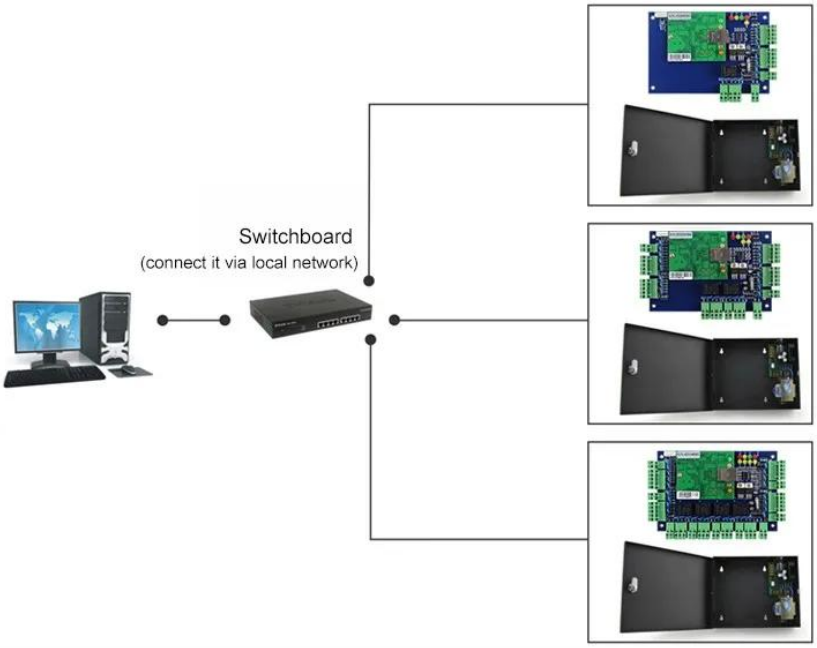

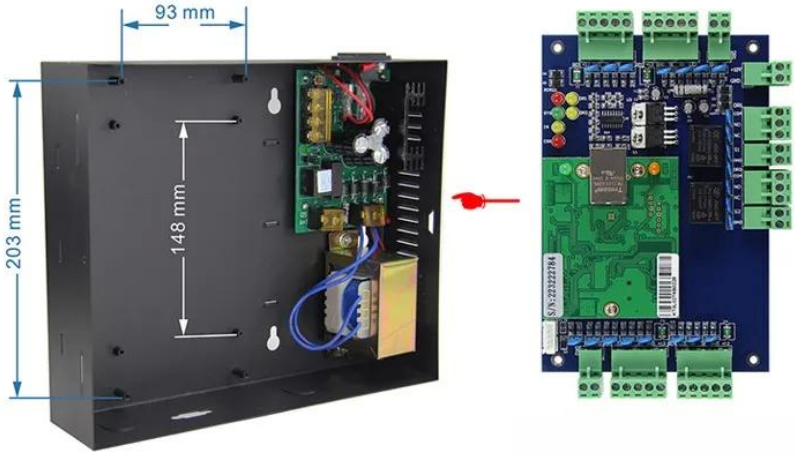

Kindly remind:

All network control board must configure with access power supply.
1 board for 1 power supply

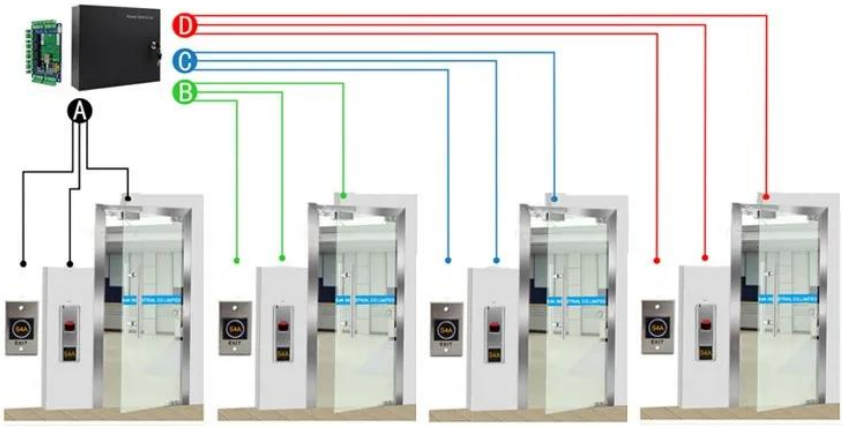

ACM-WEG04

Four doors 1 way: Control 4doors (Enter by Swipe cards and Exit by Push button)

Scope of Application

Packing & Delivery

Every order we will check the quality firstly to ensure our customer get the best product.
Our staff will pack it carefully to avoid the damage of transportation.
We will ship every goods out as soon as possible.

Shipping Way (Just for new customers reference)

We are one of the leading exporter of RFID products in China since 2000 years . With rich international trade experience we know the international shipping very well , We know which express or air/sea line is cheap and safe to your country . We can supply various certificate for you to clean your

custom to such as CO , FTA , Form F , Form E ...Ect . We wil provide our professional suggestion for your shipping . EXW , FOB , FCT , CIF , CFR ...trade term are ok for us . We can be your reliable partner for products and shipping .

Click here to order and have your FREE SAMPLE in 3 days!!!

We are professional comprehensive security access control products supplier with 20 years experience, we make sure to offer the best solution of access control system solution! So, send your inquiry details in the below, click "Send" now!
We are looking forward to forming successful business relationships with new clients around the world in the future.

Related Products

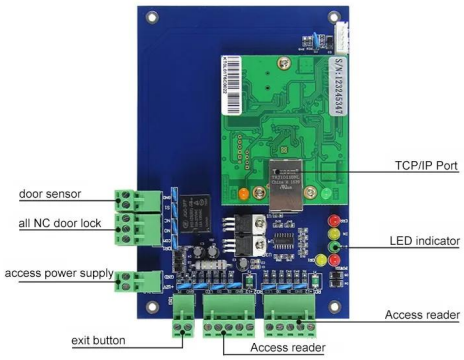

ACM-WEG01

It can control 1 door.

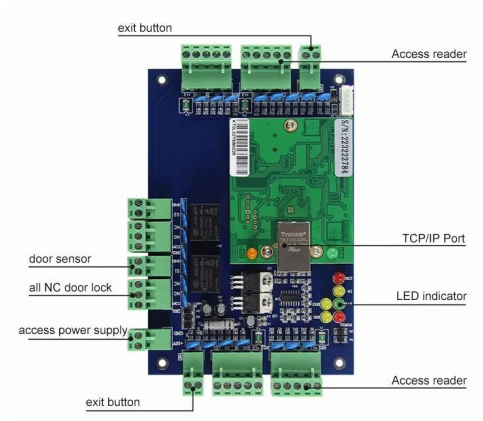

ACM-WEG02

It can control 2 door.

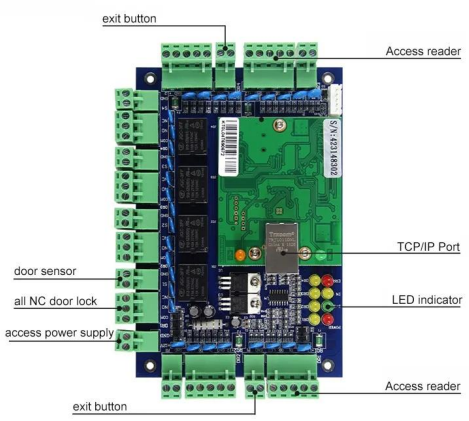

ACM-WEG04

It can control 4 door.

Our Company

ACM Shenzhen Goldbridge industrial company

As a one of leading exporter of RFID products in China , we have been in this field for 20 years already . We have rich production and exportation experience on RFID products . Our strength products are : RFID card , RFID keyfob , RFID wristband , RFID tag and various RFID reader . We are also the access control solution provider.

Our Service

Your satisfactory is our goal.

1.Any inquires will be replied within 24 hours
2. Professional manufacturer and supplier, Welcome to visit our website and our factory
3.OEM/ODM Available

4. High quality, fashin desing, reasonable & competitive price, fast lead time
5.After-sale Service :
A:All products will have been strictly quality checked in house before packing
B: All products will be well packed before shipping
C:All our products have 2-3 year warranty if the damage is not caused by human
6. Faster delivery : Around 1~ 5 days for sample order, 7~30 days for bulk order
7. Payment : You can pay for the order via : T/T, Western Union, Paypal, Ali trade assurance
8.Shipping: We have strong cooperation with DHL, FEDEX, TNT, UPS, EMS, Forwarder by SEA and By AIR, You also can choose your own shipping forwarder.

Quality Warranty

1.Warranty Service will be honored if the damage is not caused by human, ACM Goldbridge provides 2 years warranty for relative products.
2.On the contrary, ACM Goldbridge will charge extra if repair.
3. More information, please browse our service center.

Our Contact

Contact us

Please send us inquiry and order now to have your FREE SAMPLE in 3 days!!!
We are professional to offer best solution of comprehensive security rfid card access control products supplier with 20 years experience,

So, Contact us and send your inquiry details in the below now!
We are looking forward to forming successful business relationships with new clients around the world in the future.