Product Description

POE door b ion
intercom vi
doorbell

Product Parameter	Parameter Description
Resolution	1080P full HD
WIFI	2.4G b/g/n
Conversation	Full Duplex
Angle of view	150 Horizontal angle
Recording	Max 128GB MicroSD Card
Consumption	200uA Standby, on 170mA function
Night vision	IR CUT no color deviation, B/W night vision
Power Supply	AC8-24V or DC 12-36V
Battery	5000mAh Li-on battery , standby 6 months
App name	ToSee

Product Feature

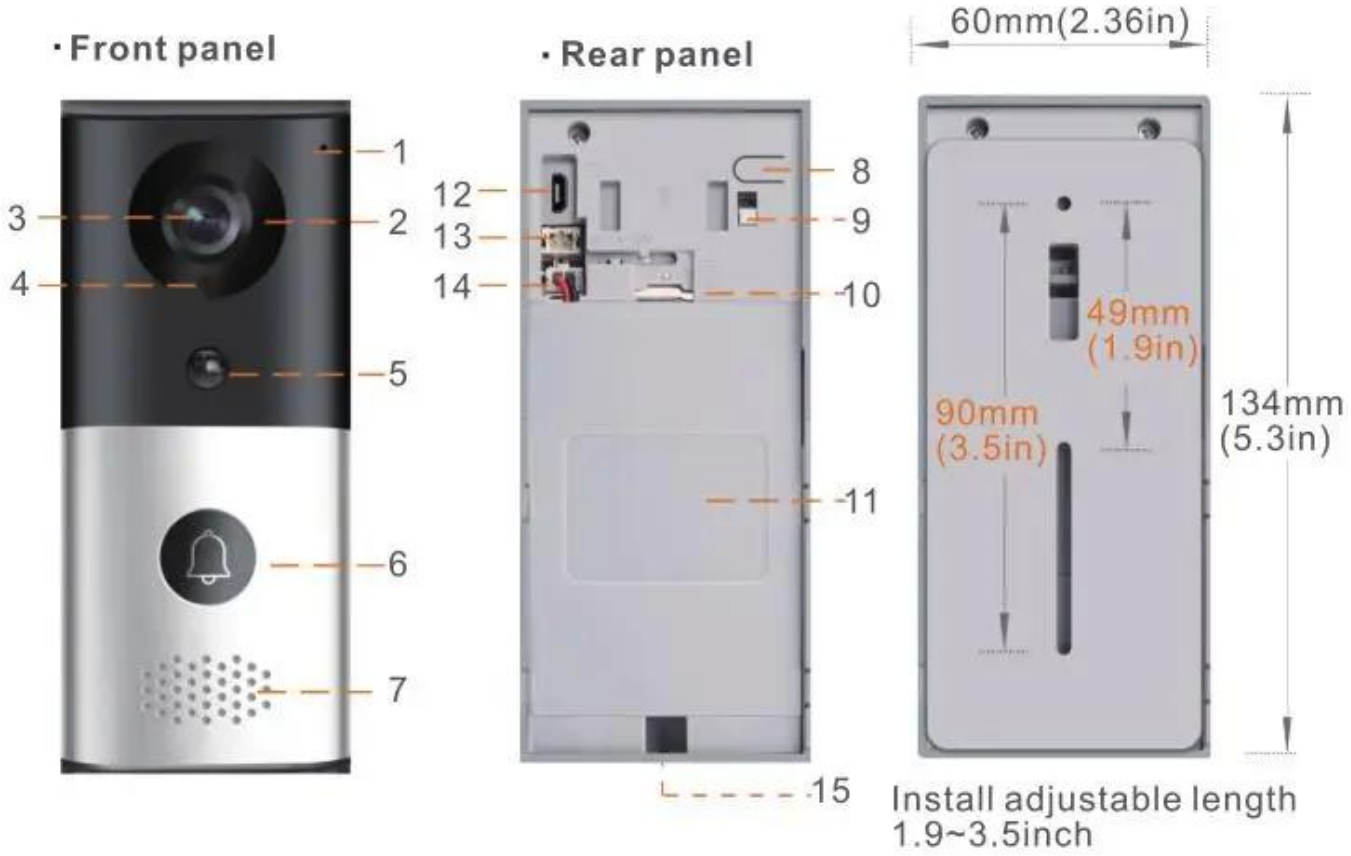

Accessories

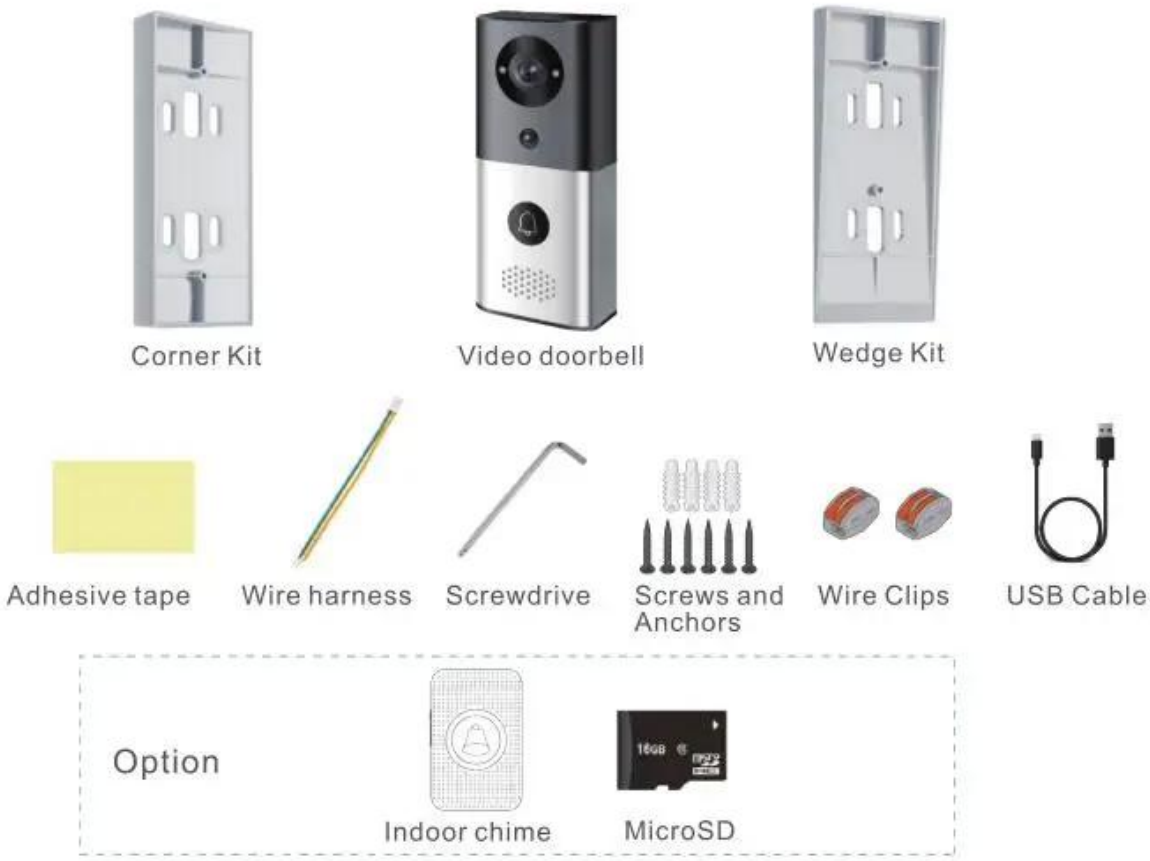

Installation of Smart Doorbell

We recommend that you carefully consider the permanent location of your Smart Doorbell, avoiding direct sunlight as well as wind and rain.

The doorbell is supplied with 2x screws, double sided tape and 1x tamper alarm screws.

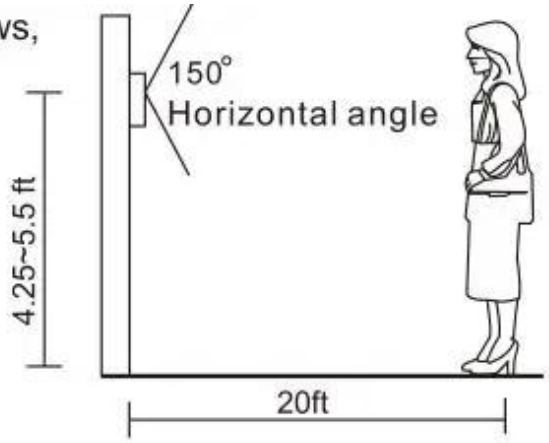

5.1 Should you not be able to use screws into walls or panels, double sided tape is applied to the housing.

System Description

The video doorbell can be connected via WFIF when the visitor presses the button on the doorbell, your smartphone interacts with the doorbell: Via real time video and full duplex talk; Take photos and record videos that save directly to your smart device; Video of call and PIR alarm message storage to MicroSD card of doorbell activates your wireless chime with preset melodies and volume control. The video doorbell is only compatibel with our wireless chime , but not compatibel with traditional doorbell chimes .

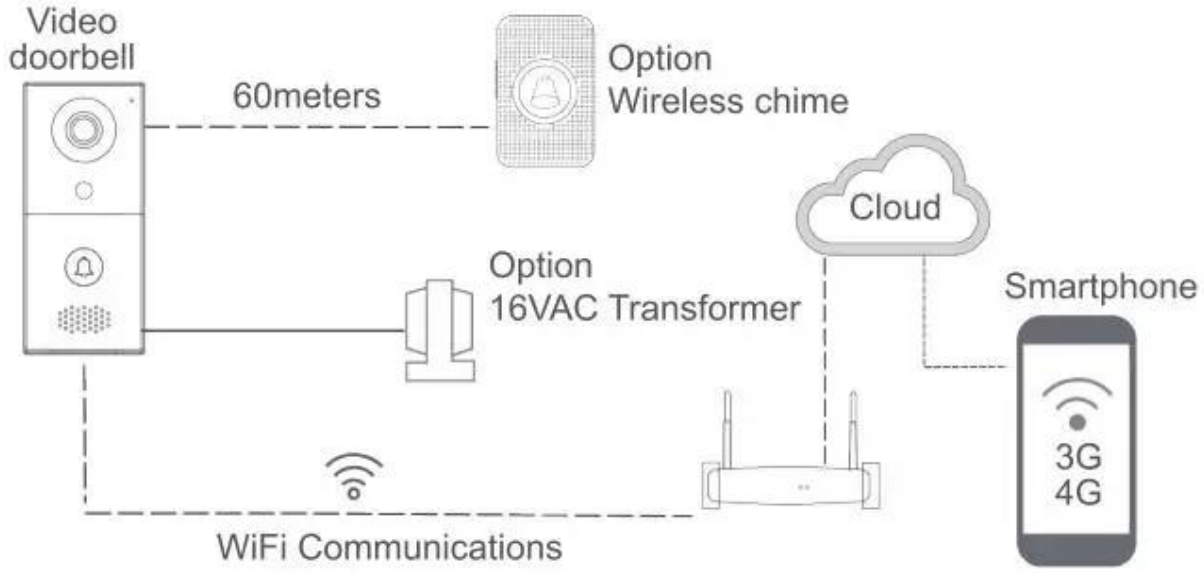

Chime Settings

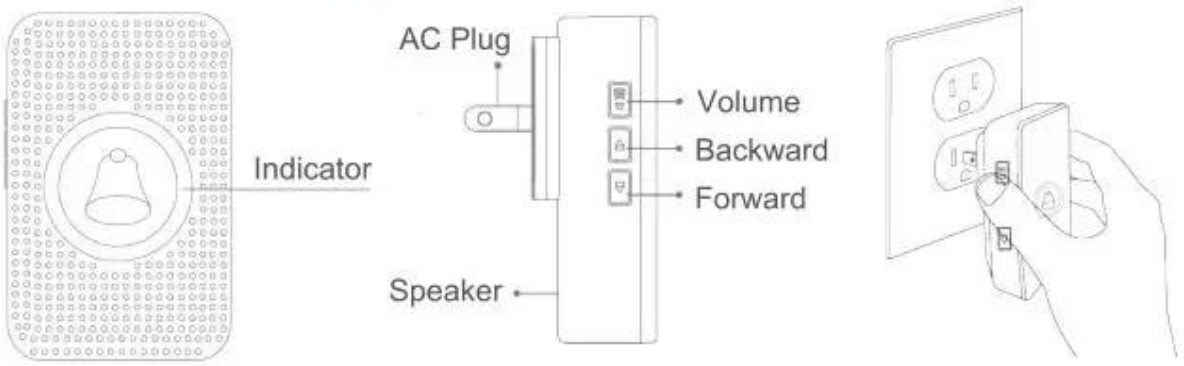

Windows Software Introduction

Windows Client CMS default account is admin, password is blank, can logon by the username and password of the app. Onvif connects NVR can be realized a large recording.

Quality Warranty

- Warranty Service will be honored if the damage is not caused by human, ACM Goldbridge provides 2 years warranty for relative products.
- On the contrary, ACM Goldbridge will cahrge extra if repair.
- More information, please browse our service center.

Packing & Delivery

Shipping Way

We have strong cooperation with DHL, FEDEX, TNT, UPS, EMS, Forwarder by SEA and By AIR
You also can choose your own shipping forwarder.

Packaging

Related Products

ACM-VB002

Smart Video Doorbell

ACM-VB001

1080P Battery WIFI Video Doorbell

ACM-VB003

2.4GHz Wireless Video Doorbell

ACM-101

1MP/2MP Auto Tracking WiFi Cameras

ACM-211V

Surveillance WiFi 360 Degree Fisheye Waterproof Outdoor Camera

ACM-101X

Low Power Home smart intelligent wireless wifi camera doorbell

ACM-208

125KHZ RFID Weigand Proximity Smart Card Reader Access Control

ACM-WEG02

Weigand Access Control Board 2 Doors Access Controller Panel

ACM-Y066

Single cylinder 12V DC intelligent Remote Control Rim Lock

We are professional comprehensive security access control products supplier with 20 years experience, we make sure to offer the best solution of access control system solution! So, send your inquiry details in the below, click

"Send" now!
We are looking forward to forming successful business relationships with new clients around the world in the future.

Our Service

1, Any inquires will be replied within 24 hours
2, Professional manufacturer and supplier, Welcome to visit our website and our factory
3, OEM/ODM Available
4, High quality, fashin desing, reasonable & competitive price, fast lead time
5, After-sale Service :
1), All products will have been strictly quality checked in house before packing
2), All products will be well packed before shipping
3), All our products have 2-3 year warranty if the damage is not caused by human
6, Faster delivery : Around 1~ 5 days for sample order, 7~30 days for bulk order
7, Payment : You can pay for the order via : T/T, Western Union, Paypal, Ali trade assurance
8, Shipping: We have strong cooperation with DHL, FEDEX, TNT, UPS, EMS, Forwarder by SEA and By AIR, You also can choose your own shipping forwarder.

OUR COMPANY :