Product Description

Security Door Access Control Keypad Stand-Alone Keypad Waterproof Door Lock Keypad Controller Zinc Alloy Metal

This is ACM Industrial Co.,Limited.
We are professional supplier for high quality access controller at competitive price.

Here are our main categoties below:_

- Access Control Panel
- Standalone Access Controller(keypad/smart card/fingerprint/face)

- Facial & Fingerprint Time Attendance and Access Control
- Electric Magnetic lock / Bolt lock / Strike lock/Cabinet lock

- RFID Card Reader
- Exit Push Button and other accessories etc.

Now show you the standalone access control as follow~

Product Description

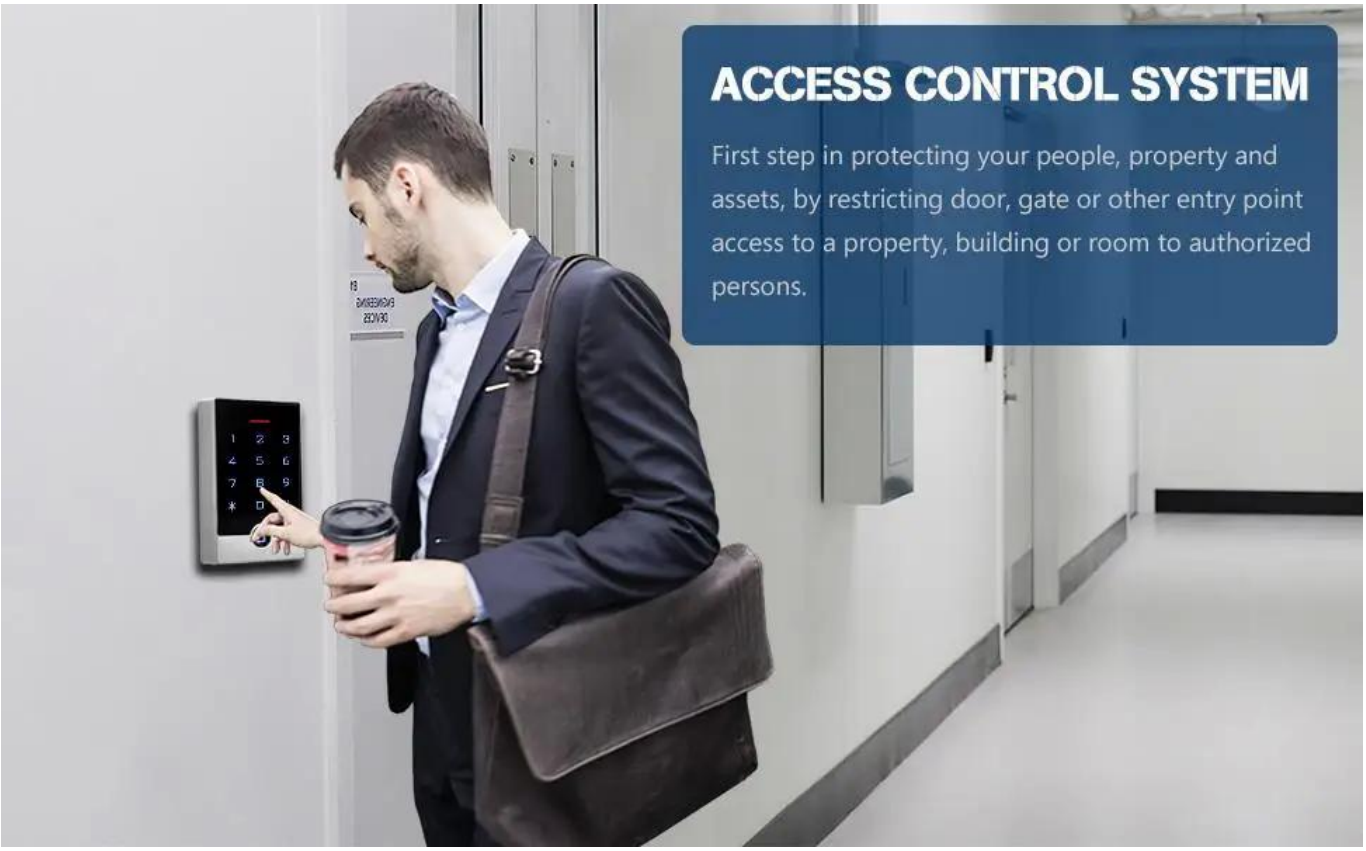

Access Control Keypad

- Professional design for Home and Office, Sensitively and response quickly.
- Contactless ID transponder technology, contactless transmission of data.
- With 5pcs ID Key Fobs, each card pre-programmed with a unique ID number, which is printed on the card.
- Full programming from the keypad, can works alone, no need to connect on the computer.
- With door bell button, can connect to a extra door bell.
- Application Home, Garage, Office, or Gate Use.

single door multifunction standalone access controller

- Work Voltage: DC 12V
- Operating Current: < 100mA
- User capacity: 2000 users
- Card Reading Distance:1~15mm
- Open Mode: ID Card or Access Password
- Identification frequency: ID (EM) type: 125KHz
- Material: Zinc Alloy
- Temperature: -40℃~60℃
- Weight: Approx. 46g/0.1lb
- Dimensions: Approx. 4.5x2.9x0.8 in(L*W*H)

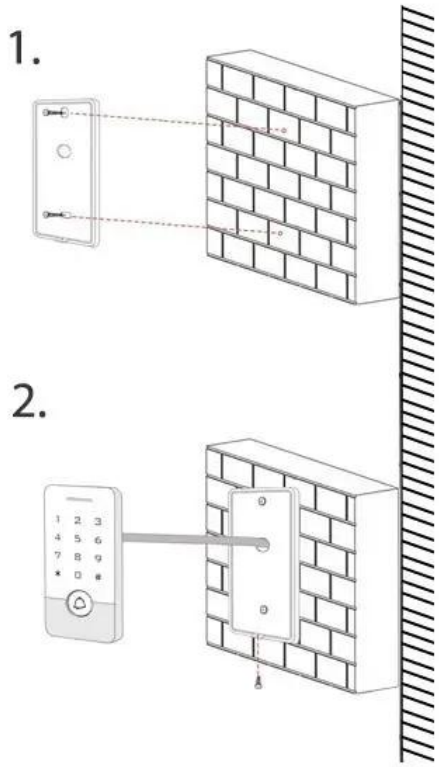

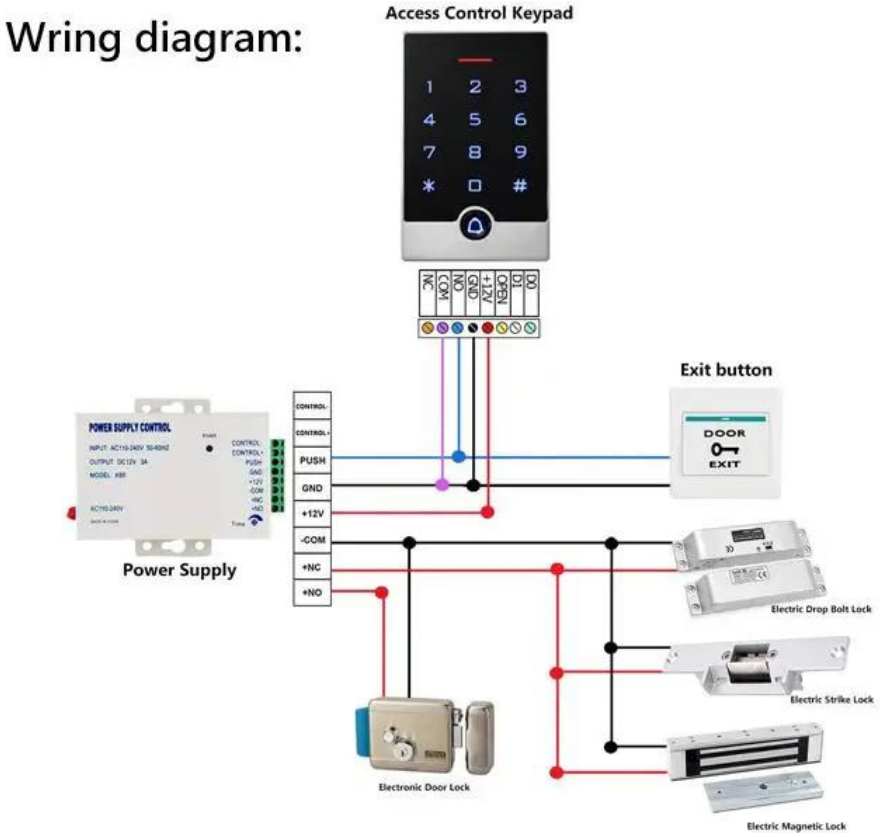

Installation:

Drill hole according to the size of the device and fix the back shell with the equipped screw. Thread the cable through the cable hole.

connect the wires according to your required function, and wrap the unused wires to avoid short circuit.

After connecting the wire, install the machine. (as show below)

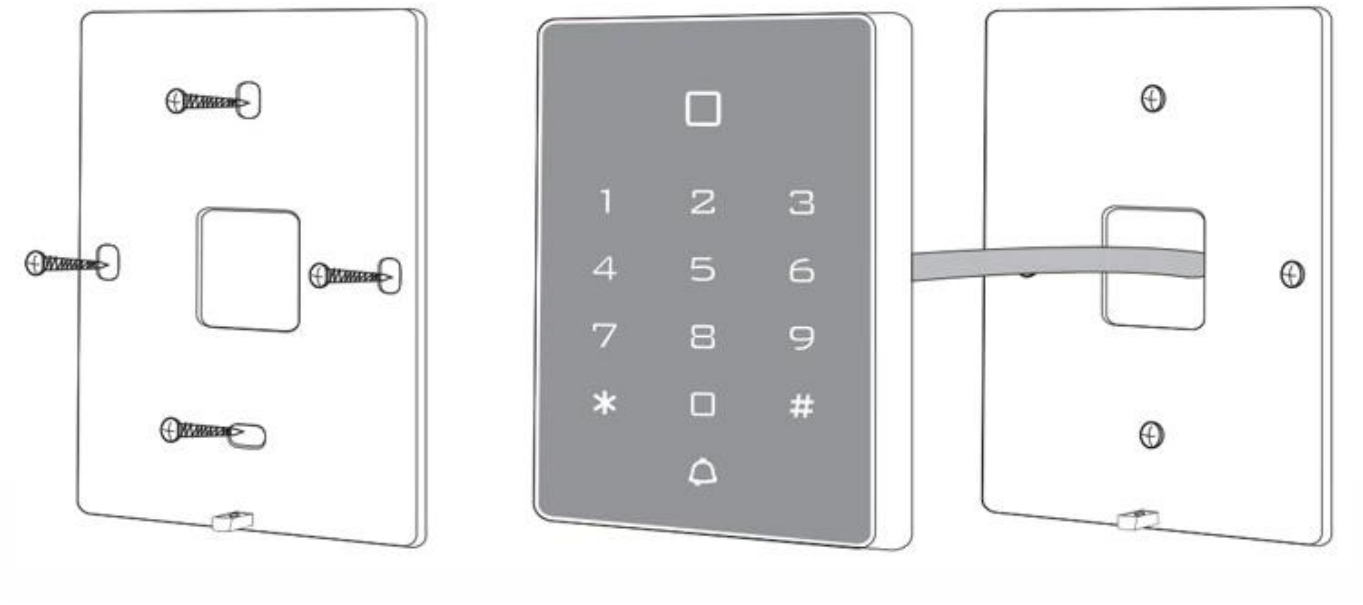

How to Install

- Remove the back cover from the keypad using the supplied special screw driver
- Drill 2 holes on the wall for the Self tapping screws and 1 hole for the cable
- Put the supplied rubber bungs into the 2 holes
- Fix the back cover firmly on the wall with 2 Self tapping screws
- Thread the cable through the cable hole
- Attach the keypad to the back cover

Related Products

SHENZHEN GOLDBRIDGE INDUSTRIAL CO.,LTD

— TOUCH-SCREEN ACCESS CONTROL —

ACM-HT1

ACM-HT2

ACM-HT3

ACM-TS20

ACM-TS21

ACM-TS21B

ACM-TS22

ACM-TS23

ACM-TS24A Silver

ACM-TS24B Bronze

ACM-TS25

ACM-TS26

ACM-T1

ACM-T2, T3, T4

ACM-T5

ACM-T50

ACM-T6

ACM-T60

ACM-T8

ACM-T9

ACM-T10 Plastic

ACM-T11 Plastic

ACM-T12 Plastic

ACM-T15

ACM-T1101

ACM-T1102

ACM-T1301

ACM-T1302

www.goldbidgesz.com ;sales@goldbridgesz.com

Packing & Deliver

Shipping Way

We have strong cooperation with DHL, FEDEX, TNT, UPS, EMS, Forwarder by SEA and By AIR
You also can choose your own shipping forwarder.

Packaging
Keypad access control packaging: Normal packing

Our service

1, all questions will be answered within 24 hours
2, professional manufacturer and supplier, welcome to visit our website and our factory
3, OEM / ODM available
4, high quality, fashin desing, reasonable and competitive price, quick delivery time
5, after-sales service:
1), all the products will have been strictly checked at home before packing
2), all products will be well packed before shipment
3), All our products have a 2-3 year warranty if the damage is not caused by human being
6, faster delivery : About 1 ~ 5 days for sample order, 7 ~ 30 days for bulk order
7, payment: You can pay for the order via: T / T, Western Union, Paypal, Ali commercial insurance
8, shipping: We have a strong partnership with DHL, FEDEX, TNT, UPS, EMS, freight forwarder by sea and by air, you can also choose your freight forwarder.

FAQ

Q: 1. How can I place an order?
A: List your needs by e-mail. Then we will send you the offer as soon as possible, after order confirmation, we will organize the production as soon as possible.

Q: 2. What about payment and shipping?
A: Commercial warranty and T / T, Paypal, Western Union.
Customers can choose by sea, air or express (DHL, FedEx, TNT UPS etc.)

Q: 3. How can I get a sample to check the quality?
A: We could supply you free sample and the freight cost paid by you.

Q: 4. How long can I wait to get the samples?
A: it depends on the quantity. Normally 3-7 days for 5000 pieces and 7-15 days for 100,000 pieces

Q: 5. Can your products be customized?
A: Almost all your products are customized, including material, size, thickness and printing. OEM orders are welcome.

Q: 6. Are you a trading company or factory?
We are one of the leading manufacturers of RFID cards / NFC tags / RFID keybod / RFID reader RFID reader and access control products in China for over 20 years.

Company Information:

20+ YEARS EXPERIENCE

OEM & ODM

ACCESS CONTROL SYSTEMS ONE STOP SOLUTION PROVIDER

Goldbridge is Top 10 China Manufacture On Alibaba,
Specializes In Provide Kinds Of RFID/NFC Cards, FID Tags, RFID Card Reader, UHF Reader, Access Control System, Electromagnetic Locks, etc Since 1999

Customized Services | Qually Assurance | Fast Delivery | Best After-Sales Service

OUR FACTORY

- **Access Control and RFID Reader Production Line:**
- Monthly production quantity is up to 50,000pcs , We are Provides OEM&ODM services including product research and development, LOGO printing, customized.etc

- **Electromagnetic lock & Smart Door Lock Production Line :**
- Monthly production quantity is up to 100,000pcs ,
- Our factory is built with modern manufacture environment, facilities, equipment and professional operation technicians.
- Goldbridge Provides OEM&ODM services including product research and development, LOGO printing and product box customized.

- **RFID & NFC Cards & Tags Production Line :**
- RFID Tag, Wristband, Keyfob: 11,000,000pcs (monthly output)
- Four Production Lines For Smart Card, PVC Card, Prelam Sheet: 20,000,000pcs (monthly output)
- Goldbridge Provides OEM&ODM services for LOGO printing, development, customized.

ADVANTAGE

WHY CHOOSE US?

1. **FAST DELIVERY** Faster delivery by air by express. (DHL,UPS or Fedex)
2. **LONG HISTORY** 20 years experience in RFID & Access Control industry
3. **OEM ACCEPTABLE** 20 years OEM&ODM experience for 1000 + VIP client from US and Europe
4. **HIGH QUALITY** Design and manufacture high quality produtcs with 30 R&D; engineers.

APPLICATION

Bus, supermarket,school, government, hospital, factory

CERTIFICATE

Access Control CE | Access Control Rohs | EM Lock EMC Certificate | EM Lokc ROHS Certificate

RFID Card Reader CE | RFID Card Reader Rohs | UHF Reader CE Certifiate | UHF Reader ROHS