## Product Description

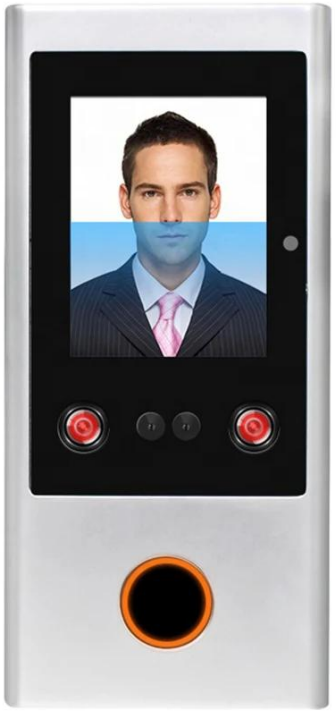

### Smart Fingerprint Machine Metal 125Khz EM Card Standalone Face Recognition Access Controller

> Metal housing, anti-vandal

> Standalone with offline Time Attendance

> 1000 face users, 3000 card users (including 10 administrators)

> Card type: EM Card or Mifare Card (Optional)

> Multiple Access: face or card, card + face, face only or card only

> With Wiegand 26 or 34 bits input & output

> With 200000 log capacity

Use of Capacity Face Card Log Capacity

0 2 V D C t 1 4 m V s 2 3 m A g e I d l e C u r r e n t A c t i v e C u r r e n t

2
4
1
Display
TFT Color Screen
LCD Display
Camera
HD Camera
Infrared Light

```
<dependency>
    <groupId>com.alibaba.fastjson2</groupId>
    <artifactId>fastjson2-extension-spring6</artifactId>
    <version>2.0.43</version>
</dependency>
```


FastJSON2 Extension Spring6 for Spring Framework 6.x, Spring Boot 3.x, Jakarta EE, Java 17+ or GraalVM native-image

FastJSON2 Extension Spring6 为 Spring Framework 6.x, Spring Boot 3.x, Jakarta EE, Java 17+ 或 GraalVM native-image 提供支持

Fig. 1 Mode Frequency Mix Calibration Hardware Mode Technology Read Range

Wiegand Output Connector Exit Button, DOTL, Alarm, Wiegand Input, Wiegand Output

**Wiegand 26 to 34 bits**

Input & Output (default: 26 bits)

EndoroonmeCt-5pCrat-Fig-T2mpFra%RHe3%RHating Humidity

Physical Shelf Enclosure Power Cement Load Weight

## Product Show

## Metal design, anti-vandal

Supports Offline Time Attendance, with 200,000 Log Capacity

Data 0
Data 1

Wiegand 26 or 34 Bits Input & Output

Two infrared lamps and two HD cameras
Accurate recognition in various environments

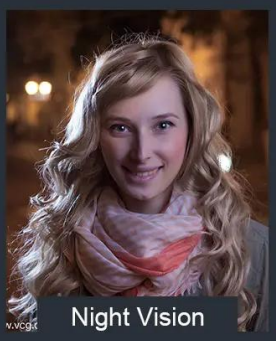

# Product size

[Detailed Image]

Supports Wiegand 26/34 output, can be used as a card reader door access control

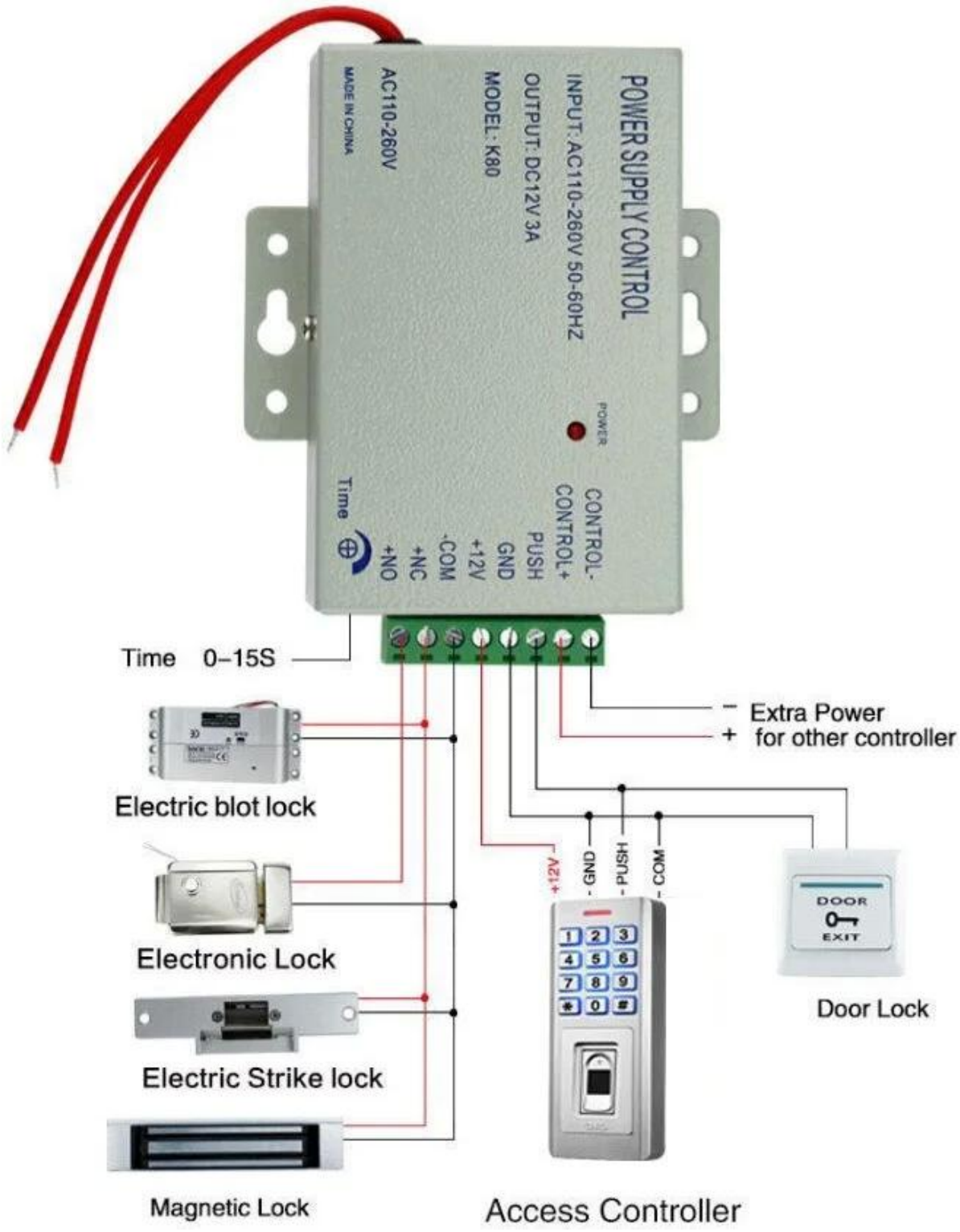


## Our Service

## Our Service

1.Any inquires will be replied within 24 hours
2. Professional manufacturer and supplier, Welcome to visit our website and our factory
3.OEM/ODM Available
4. High quality, fashin desing, reasonable & competitive price, fast lead time
5.After-sale Service :
A:All products will have been strictly quality checked in house before packing
B: All products will be well packed before shipping
C:All our products have 2-3 year warranty if the damage is not caused by human
6. Faster delivery : Around 1~ 5 days for sample order, 7~30 days for bulk order
7. Payment : You can pay for the order via : T/T, Western Union, Paypal, Ali trade assurance
8.Shipping: We have strong cooperation with DHL, FEDEX, TNT, UPS, EMS, Forwarder by SEA and By AIR, You also can choose your own shipping forwarder.

## Quality Warranty

- Warranty Service will be honored if the damage is not caused by human, ACM Goldbridge provides 2 years warranty for relative products.
- On the contrary, ACM Goldbridge will cahrge extra if repair.
- More information, please browse our service center.

# Packing & Delivery

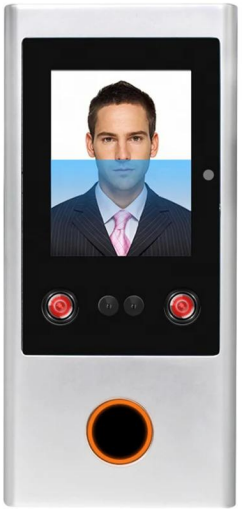

## Shipping Way

We have strong cooperation with DHL, FEDEX, TNT, UPS, EMS, Forwarder by SEA and By AIR
You also can choose your own shipping forwarder.

## Packaging

Keypad access control packaging: 1unit per box, 50pcs per carton,
Carton size : 45*31*28cm , Gross Weight :16kg.