Product Description

12V 60W Waterproof IP67 Electronic LED Driver

1. High-reliability Special drive power for LED street lights, installed at high altitude, with waterproof aluminium shell drive power supply
2. High efficiency LED is an energy-saving product, and the efficiency of driving power supply is high.
3. High power factor is the grid's load requirements.
4. Drive mode There are two types of traffic: one is a constant voltage source for multiple constant current sources, and each constant current source supplies power to each LED separately.

Parameter Description Dwsetchpnpwersupplymodulepcbboardac22vPXAdX16SmzeAG9uP5V5t6HeNppdinaEDbampsuchasLampposts,streetlamps,spotlights,etc

Overvoltage protection is on the output voltage reaches 13% of the rated voltage. The internal components of the product break down and there is no output, thus protecting the external equipment.

When the output is shorted or cuited, the product is protected and the input model is less than 2W.

When the current protection is 6A-7.5A, product protection has no output.

Detailed Images

Dimensions(mm)

Short circuit/Over voltage/Over load
Over heat Protection

60W-12V-5A-IP67

RFID ACCESS CONTROL
DETECTOR
POSITION

Application

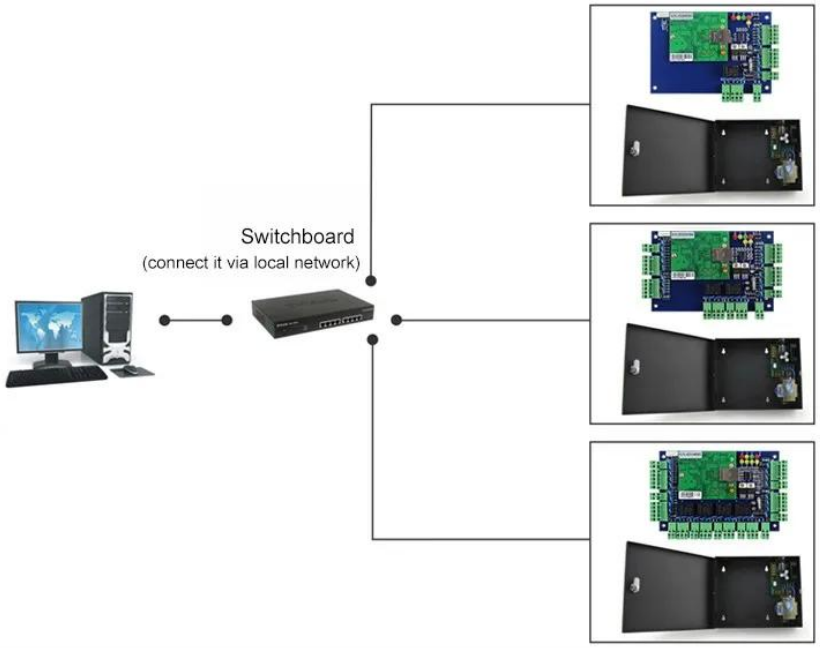

Kindly remind:

All network control board must configure with access power supply.
1 board for 1 power supply

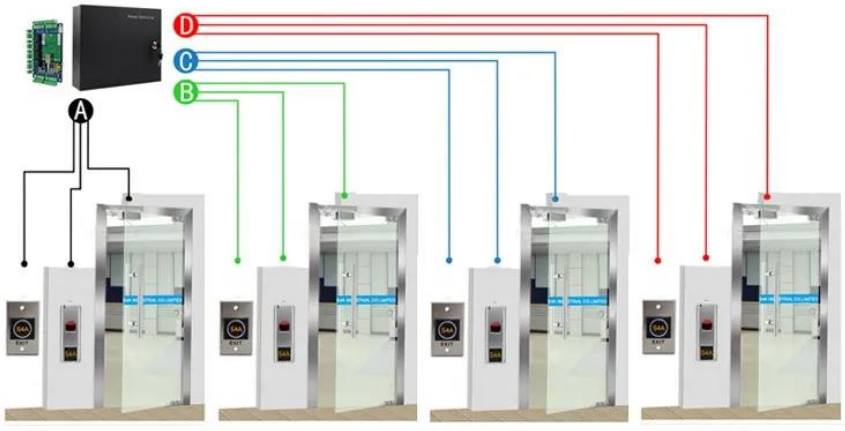

ACM-WEG04

Four doors 1 way: Control 4doors (Enter by Swipe cards and Exit by Push button)

Packing & Delivery

Every order we will check the quality firstly to ensure our customer get the best product.
Our staff will pack it carefully to avoid the damage of transportation.
We will ship every goods out as soon as possible.

Shipping Way (Just for new customers reference)

We are one of the leading exporter of RFID products in China since 2000 years . With rich international trade experience we know the international shipping very well , We know which express or air/sea line is cheap and safe to your country . We can supply various certificate for you to clean your

custom to such as CO , FTA , Form F , Form E ...Ect . We wil provide our professional suggestion for your shipping . EXW , FOB , FCT , CIF , CFR ...trade term are ok for us . We can be your reliable partner for products and shipping .

Related Products

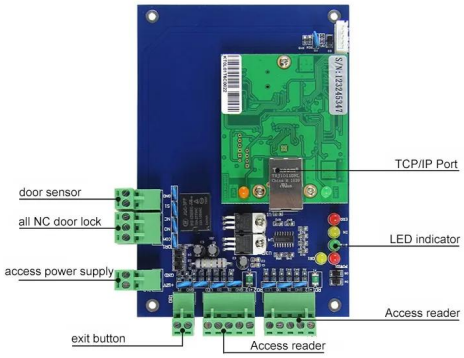

ACM-WEG01

It can control 1 door.

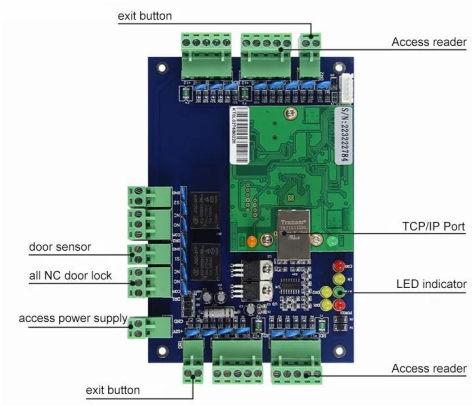

ACM-WEG02

It can control 2 door.

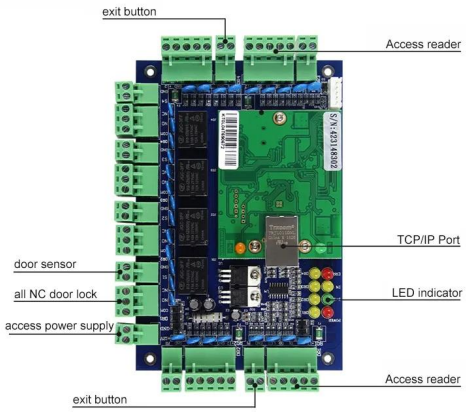

ACM-WEG04

It can control 4 door.

You May Like

ACM-K2A/B

No touch Door Realese Exit Button with led

ACM-Y280

Surface mounted magnetic lock (280kg/600lbs)

ACM-Y806-5A

Power supply 5A for access control

ACM225

Touch Keypad RFID Access Control 12khz

ACM-210

Metal Waterproof RFID Wiegand Access Control

ACM26X

125Khz EM Card RFID Reader Size:
115mm×75.5mm×16.8mm

Our Company

ACM Shenzhen Goldbridge industrial company

As a one of leading exporter of RFID products in China , we have been in this field for 20 years already . We have rich production and exportation experience on RFID products . Our strength products are : RFID card , RFID keyfob , RFID wristband , RFID tag and various RFID reader . We are also the access control solution provider.

Our Service

Your satisfactory is our goal.

1.Any inquires will be replied within 24 hours
2. Professional manufacturer and supplier, Welcome to visit our website and our factory
3.OEM/ODM Available
4. High quality, fashin desing, reasonable & competitive price, fast lead time
5.After-sale Service :
A:All products will have been strictly quality checked in house before packing

B: All products will be well packed before shipping
C:All our products have 2-3 year warranty if the damage is not caused by human
6. Faster delivery : Around 1~ 5 days for sample order, 7~30 days for bulk order
7. Payment : You can pay for the order via : T/T, Western Union, Paypal, Ali trade assurance
8.Shipping: We have strong cooperation with DHL, FEDEX, TNT, UPS, EMS, Forwarder by SEA and By AIR, You also can choose your own shipping forwarder.

Quality Warranty

1.Warranty Service will be honored if the damage is not caused by human, ACM Goldbridge provides 2 years warranty for relative products.
2.On the contrary, ACM Goldbridge will charge extra if repair.
3. More information, please browse our service center.