Controlador de acesso

Produtos de venda quente

	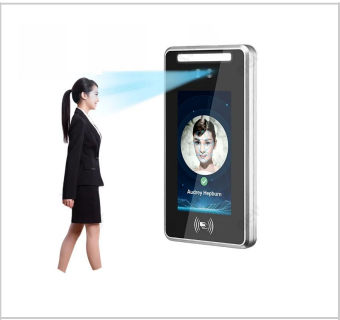		
Medição de temperatura por reconhecimento facial biométrico AI	Presença de tempo e controle de acesso de porta	Controle de Acesso Teclado Tuya Touch	WG 26 Controle de acesso por toque
		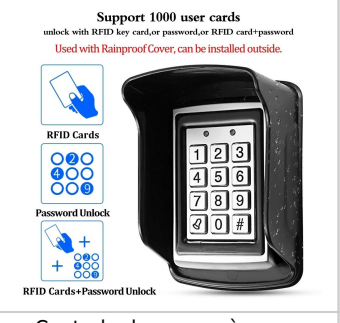	
Controle de Acesso Independente	Controle de acesso do teclado	Controle de acesso à prova d'água	Controle de acesso do teclado
Controle de Acesso de Metal	Controle de Acesso Wi-Fi	Kit de sistema de controle de trava magnética	Bloqueio biométrico de impressão digital Tuya Wifi

Metal Ble teclado de controle de acesso

Descrição do produto

O H1-BT é um teclado de toque à prova d'água habilitado para Ble controlador de acesso RFID. É integrado ao Tuya, que suporta 100 usuários (incluindo 255 usuários de cartão/PIN). Está disponível

para iOS e Android.

> Waterproof, conforms to IP66
> Metal housing, anti-vandal
> Card type: EM Card or 13.56mhz Card
> iOS and Android available
> Add / Delete users by APP
> Support checking Opening Record
> Support Gateway
> Multiple Access Modes: Smartphone, Card, PIN

Capacidade do usuário	Usuário de Hardware: 1000, Usuário de APP: 100 (incluindo 255 usuários de cartão/PIN)
usuário comum	988
Usuário visitante	10
usuário de pânico	2
Comprimento do PIN	4~6 dígitos
Tensão operacional	12~18 Vcc
Corrente ociosa	≤ 60mA
Ativo atual	≤ 150mA
Leitor de cartão de proximidade	EM ou 13,56 mhz
tecnologia de rádio	125KHz/13,56MHz
Intervalo de leitura	2~6cm
Conexões de Fiação	Saída de relé, botão de saída, alarme, contato de porta, entrada/saída Wiegand
Retransmissão	Um (NO, NC, Comum)
Tempo de saída de relé ajustável	0~99 segundos (padrão de 5 segundos)
Bloquear carga de saída	Máximo de 2 Amp
Interface Wiegand	Versão do cartão EM: Wiegand 26~44 bits de entrada e saída (Padrão de fábrica: Wiegand 26bits)
	Versão do cartão de 13,56 mhz: Wiegand 26 ~ 44 bits, 56 bits, entrada e saída de 58 bits (Padrão de fábrica: Wiegand 34 bits)
Saída do PIN	4 bits, 8 bits (ASCII), 10 dígitos Virtual Number (Padrão de fábrica: 4 bits)
Ambiente	Atende IP66
Temperatura de operação	-40℃ ~ 60 ℃ (-40°F ~ 140 ° F)
Umidade Operacional	0% UR ~ 98% UR
Físico	Liga de Zinco
Cor	Prata e preto
Dimensões	C145 x L68 x A25 (mm)
Unidade de peso	500g
Peso	615g

Commmon Power Supply

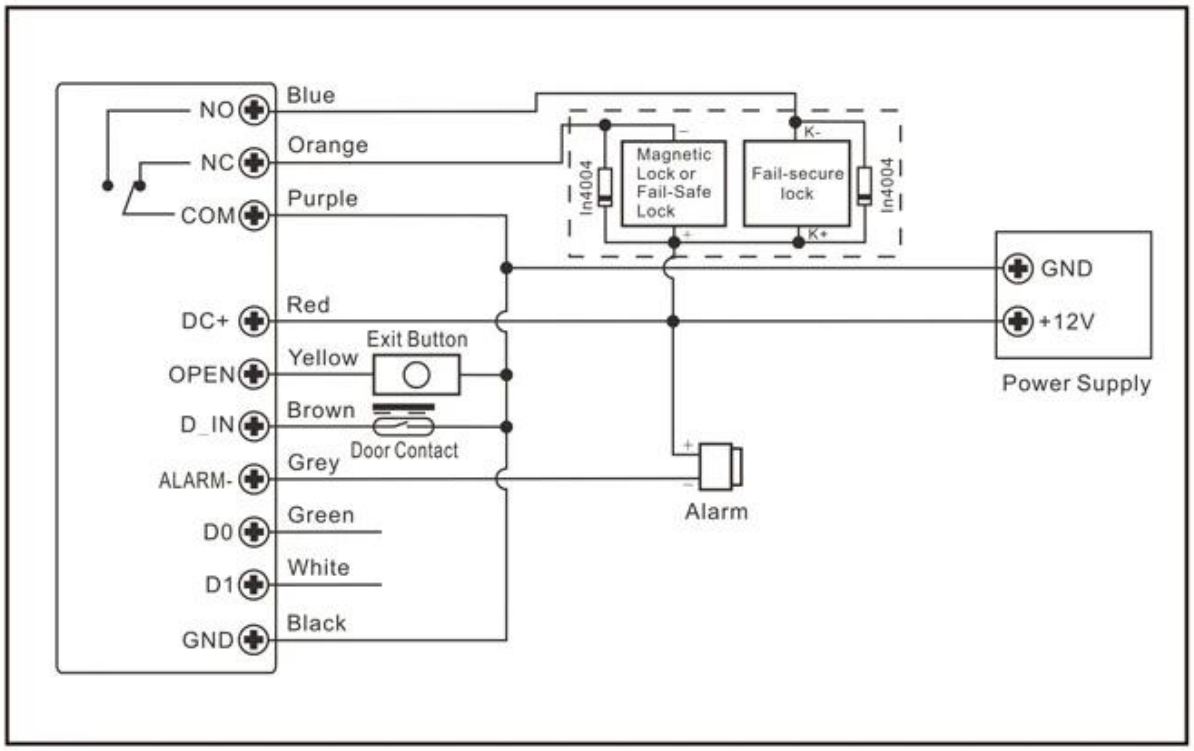

Special Power Supply

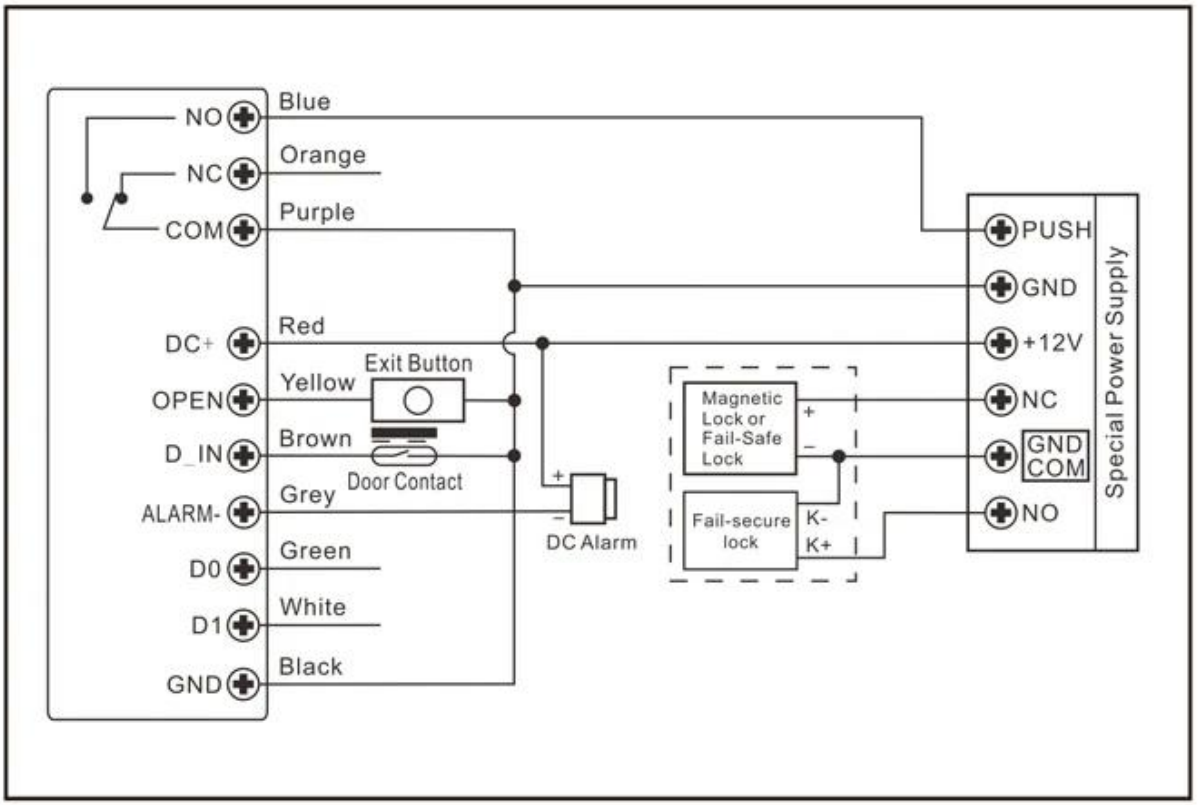

produtos relacionados

SHENZHEN GOLDBRIDGE INDUSTRIAL CO.,LTD

Access Control System

Complete Door Access Control Solution Provider

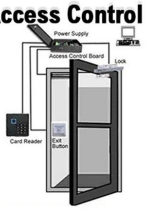

Hot Selling Equipments

BEST SELLERS

Standalone Fingerprint & RFID Outdoor Waterproof Access Controller

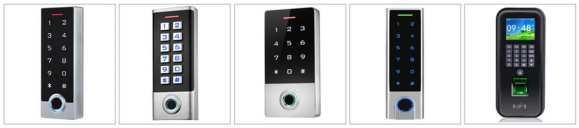

ACM-209E | ACM-209V | ACM-209H | ACM-210E | ACM-9800

ACM-209D | ACM-209F | ACM-851 | ACM-TM07 Face Recognition | ACM-TM05 Face Recognition

Standalone Waterproof Metal RFID Access Control

ACM-211A | ACM-212A | ACM-208A | ACM-210A | ACM-208B

ACM-208C | ACM-A65 | ACM-A55 | ACM-210F | ACM-209A

Standalone Waterproof Touch Screen /Keypad RFID Access Controller

ACM-230K | ACM-230T | ACM-223 | ACM-225 | ACM-227

ACM-226 | ACM-301C | ACM-301D | ACM-212 | ACM-212C

Touch Screen Standalone Waterproof Metal RFID Access Controller

ACM-A40 | ACM-A50 | ACM-A10 | ACM-A20 | ACM-A30

ACM-A60 | ACM-A80 | ACM-A88 | ACM-A21 | ACM-A51

www.goldbidgesz.com ;sales@goldbridgesz.com

Informações da Empresa

20+ YEARS EXPERIENCE

OEM & ODM

ACCESS CONTROL SYSTEMS ONE STOP SOLUTION PROVIDER

Goldbridge is Top 10 China Manufacture On Alibaba,
Specializes In Provide Kinds Of RFID/NFC Cards, FID Tags, RFID Card Reader, UHF Reader, Access Control System, Electromagnetic Locks, etc Since 1999

- Customized Services
- Qually Assurance
- Fast Delivery
- Best After-Sales Service

ADVANTAGE

WHY CHOOSE US?

1. **FAST DELIVERY** Faster delivery by air by express. (DHL,UPS or Fedex)
2. **LONG HISTORY** 20 years experience in RFID & Access Control industry
3. **OEM ACCEPTABLE** 20 years OEM&ODM experience for 1000 + VIP client from US and Europe
4. **HIGH QUALITY** Design and manufacture high quality produtcs with 30 R&D; engineers.

OEM PROCESS

01 Identify requirements → 02 Free design → 03 Sign a contract

04 Order production → 05 Pay the retainage → 06 Arrange delivery

PRODUCT CATEGORY

RFID / NFC SMART CARD

Be customized according to you need

Fit for systems of transport, E-payment, Access Control, Event, Loyalty, ect.

View More

ACCESS CONTROL SYSTEM

Security for All: Network Access Control Board ,Standalone Access Controller, Biometric Access Control, T&A time attendance, Facial Access Control

View More

RFID & LONG RANGE UHF READER

20+ Years of professional Experience in production of rfid uhf hardware

- UHF desktop reader writer,
- UHF integrated reader,
- UHF R2000 fixed reader,

View More

ELECTRONMAGNETIC LOCK

Professional Electric Locks Manufacturer In China

Electromagnetic lock with OEM & ODM since 1999 60KG /110KG /180KG /280KG /350KG /500KG

View More

APPLICATION

Bus, supermarket,school, government, hospital, factory

OUR PROJECT

Vehicle Access Control

Personnel Access Control

Logistics Management

Pipeline Management

Automatic Charging Without Parking

WEB CLOUD SOFTWARE

Multi Location Attendance and Access Control Solutions

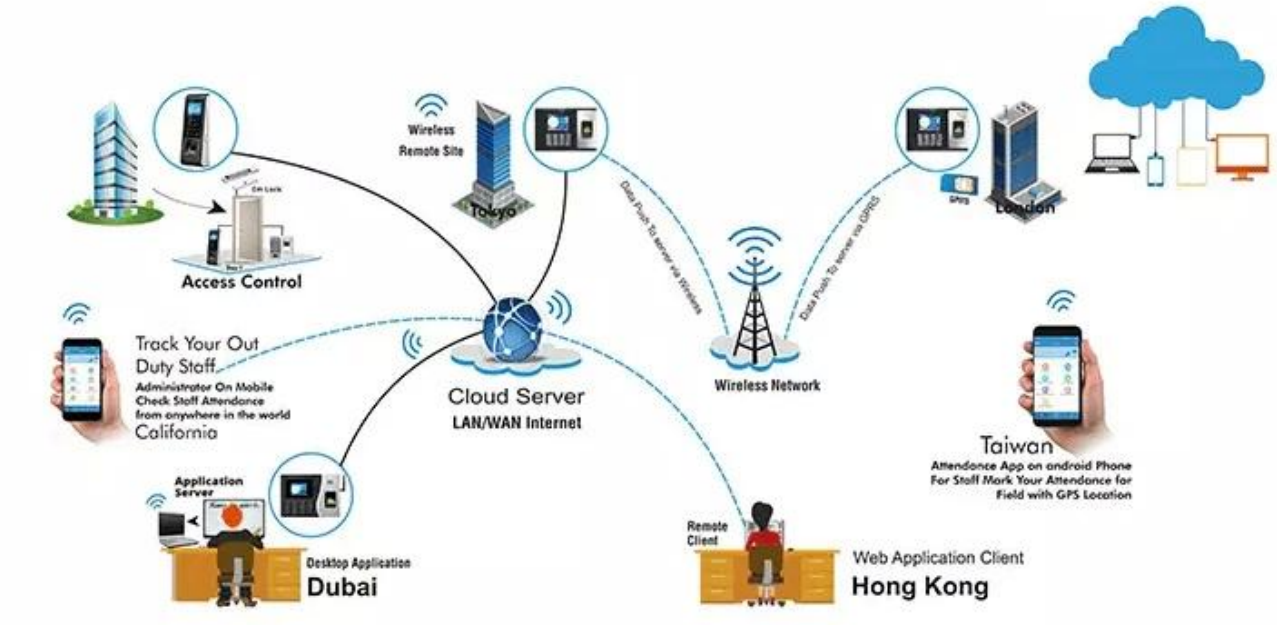

HOT SALE

5m Range Intergrated UHF RFID Long Range Reader With Free SDK cheap UHF RFID Reader

Min.order : 1 Set

$51.00-$57.00

USB 13.56MHz RFID Reader Contactless Smart Card Reader

Min.order : 1 Piece

$3.69-$4.14

Wholesale stock Access control card contactless em4200 tk4100 t5577 rfid chip pvc smart blank proximity id 125khz em rfid card

Min.order : 1 Piece

$0.05-$0.07

Wholesale Custom Smart Proximity Bracelets Access Control Soft Silicone RFID Wristband

Min.order : 1 Piece

$0.32-$0.36

ACM Waterproof Metal Touch Keypad Standalone Fingerprint Digital Keypad Access Control with 125KHz EM Card Reader

Min.order : 1 Piece

$24.00-$26.00

Standalone Metal Access controller System IP67 Waterproof Keypad Door Entry Electronic RFID

Min.order : 1 Pieces

$11.00-$13.0

12V/24V 280kgs/600lbs Electric Remote Control Gate door em magnetic Lock

Min.order : 1 Piece

$5.00-$10.00

Touchless Switch IR Sensor Push Buttons No Touch Infrared Door Exit Release Button

Min.order : 1 Piece

$2.00-$5.00

Send Enquiry

COMPANY PROFILE

Shenzhen Goldbridge Industrial Co.,ltd, Established in 1999, 20 Years rfid & Access Control products factory and supplier. Include Smart cards, RFID tag , RFID & UHF Card readers, Access contro and Application System Solutions with **OEM & ODM services.**

Our factory covers an area of **4000 square metres** and empolyes more than **300 staff, it's ISO 9001:2000 qualified and serves world wide markets.**
GOLDBRIGE have a full set of advanced machines and experienced engineers and teams , which guarantees the quality of our products.

Our Products have been exported to various countries and regions, we have distributors in Singapore, American, Korea, UK, Egypt, UAE, Italy, etc. we have got our customer's well support and confidence both from Domestic and Overseas. 85% of our business comes from cooperated customers.

GOLDBRIDGE Strengths: Best Price & fast delivery, Large daily capacity, Comprehensive products Know-how, Wide range of Products. We are looking forward with our new relationship with all the sincerely customers.

OUR FACTORY

- **Access Control and RFID Reader Production Line:**
- Monthly production quantity is up to 50,000pcs , We are Provides OEM&ODM services including product research and development, LOGO printing, customized.etc

- **Electromagnetic lock & Smart Door Lock Production Line :**
- Monthly production quantity is up to 100,000pcs ,
- Our factory is built with modern manufacture environment, facilities, equipment and professional operation technicians.
- Goldbridge Provides OEM&ODM services including product research and development, LOGO printing and product box customized.

- **RFID & NFC Cards & Tags Production Line :**
- RFID Tag, Wristband, Keyfob: 11,000,000pcs (monthly output)
- Four Production Lines For Smart Card, PVC Card, Prelam Sheet: 20,000,000pcs (monthly output)
- Goldbridge Provides OEM&ODM services for LOGO printing, development, customized.

CERTIFICATE

Access Control CE | Access Control Rohs | EM Lock EMC Certificate | EM Lokc ROHS Certificate

RFID Card Reader CE | RFID Card Reader Rohs | UHF Reader CE Certifiate | UHF Reader ROHS

REVIEWS

Supplier Service: Very satisfied (5 stars)
On-time Shipment: Very satisfied (5 stars)

PVC blank rfid chip ic/id magnetic stripe credit size c...

★★★★★

great product, great vendor, hope to deal with you again

Hot 10m-20m Passive Long range UHF 12dbi Antenn...

★★★★★

Good quality ,**fast delivery**

Desktop Read Contactless Smart 125Khz Proxi...

★★★★★

Very good customer service .

Fail safe electromagnetic 12V/24VDC LED timer 280k...

★★★★★

good

PARTNER

Impinj

SAMSUNG

FUDAN
MICRO

Atmel

vodafone

TEXAS
INSTRUMENTS

ALIEN

LEGIC

infineon

FAQ

Q1 How can I place an order?

A1 Click start to order or list your requirement to us by email. Then we will send the offer to you ASAP, after the order confirmed, we will arrange production ASAP.

Q2 What about the payment and shipment?

A3 T/T , Paypal, Western Union etc.
You can choose your agent or via our agent by sea, air or express (DHL,FedEx, TNT UPS etc.)

Q4 How can I get a sample to check your quality?

A4 We could provide the sample to you, pls check the sample cost and freight cost with us.

Q5 How long can I expect to get the goods?

A5 It depends on the quantity and shipping way. You can check with us before ordered.

Q6 Can your products be customized?

A6 Almost all of our products are customized , including the material, size, thickness and printing. OEM orders are highly welcome.

Contact Us

BACK TO HOMEPAGE